installation and servicing

Harrier GTE

Your Ideal installation and servicing guide

GTE 5, GTE 6, GTE 7, GTE 8 & GTE 9

9486 2069

When replacing any part on this appliance, use only spare parts that you can be assured conform to the safety and performance specification that we require. Do not use reconditioned or copy parts that have not been clearly authorised by Ideal Boilers.

Ideal BOILERS

ENGINEERED FOR PEACE OF MIND

Table 1 Performance Data

Boiler		GTE5	GTE6	GTE7	GTE8	GTE9
Number of Sections		5	6	7	8	9
Maximum	kW	140	180	230	280	330
Heat Output	Btu/hx10³	478	614	785	955	1126
Minimum	kW	105	140	180	230	280
Heat Output	Btu/hx10³	358	478	614	785	955
Hydraulic	mbar	20.3	37.9	55.8	82.7	118.6
Resistance at 11k	in w.g.	8.1	15.2	22.3	33.1	47.5
Hydraulic	mbar	6.1	11.5	16.9	25.0	35.9
Resistance at 20k	in w.g.	2.5	4.6	6.8	10.0	14.4
Combustion Chamber	mbar	0.6	1.1	1.6	2.2	2.5
Resistance (at zero draught)	in w.g.	0.24	0.44	0.64	0.88	1.0
Minimum Draught at Smokehood	mbar	0	0	0	0	0
Outlet (for max. output)	in w.g.	0	0	0	0	0

Oil

Maximum	l/h	15.52	19.76	25.10	30.66	35.81
Oil Rate	gal/h	3.41	4.35	5.52	6.75	7.88
Maximum Flue	m³/s	0.090	0.114	0.145	0.178	0.208
Gas Volume	ft³/min	191	242	308	376	440
Flue Gas CO_2 / Temperature	% / ºC	13 / 210	13 / 210	13 / 210	13 / 210	13 / 210

Gas

Maximum	m³/h	16.13	20.56	26.09	31.87	37.23
Gas Rate	ft³/h	569	726	921	1125	1315
Maximum Flue	m³/s	0.092	0.117	0.149	0.182	0.213
Gas Volume	ft³/min	196	249	316	386	452
Flue Gas CO_2 / Temperature	% / ºC	9.5 / 210	9.5 / 210	9.5 / 210	9.5 / 210	9.5 / 210

Table 2 General Data

Flow Connection	in./DN	R2½ / 65	R2½ / 65	R2½ / 65	R2½ / 65	R2½ / 65
Return Connection	in./DN	R2½ / 65	R2½ / 65	R2½ / 65	R2½ / 65	R2½ / 65
Drain Connection	in	R1½	R1½	R1½	R1½	R1½
Safety Valve & Expansion	in	R1½	R1½	R1½	R1½	R1½
Maximum Operating Pressure	bar	6	6	6	6	6
Boiler Thermostat Setting	ºC	30 - 90	30 - 90	30 - 90	30 - 90	30 - 90
Safety Thermostat Setting	ºC	110	110	110	110	110
High / Low Setting	ºC	30 - 90	30 - 90	30 - 90	30 - 90	30 - 90
Nominal Flue	mm	180	180	200	200	200
Diameter	in.	7	7	8	8	8
Boiler Water	l	116	136	156	176	196
Content	gal	25.5	29.9	34.3	38.7	43.1
Boiler DRY Weight	kg	608	694	791	886	977
less Burner Unit	lb	1340	1530	1744	1953	2154

Note.

Fuel rates and flue gas data relate to maximum output ratings. Gas firing data relates to the use of NATURAL GAS ONLY.

Details for the use of LPG are available on request from **Caradon Ideal Ltd.**

Natural gas consumption is calculated using a calorific value of 38.7MJ/m³ (1038Btu/ft³) gross or 34.9MJ/m³ (935Btu/ft³) nett at 15ºC and 1013.25mbar.

Oil rates relate to Gas Oil using a calorific value of 45.56 MJ/kg gross or 42.69 MJ/kg nett.

HEALTH & SAFETY DOCUMENT NO. 635

The electricity at work regulations, 1989. The manufacturer's notes must NOT be taken, in any way, as overriding statutory obligations.

IMPORTANT. These appliances are CE certified for safety and performance. It is, therefore, important that no external control devices, e.g. flue dampers, economisers etc., are directly connected to these appliances unless covered by these Installation and Servicing Instructions or as otherwise recommended by **Caradon Ideal Limited** in writing. If in doubt please enquire.

Any direct connection of a control device not approved by **Caradon Ideal Limited** could invalidate the certification and the normal appliance warranty. It could also infringe the Gas Safety Regulations and the above regulations.

CONTENTS

Assembly. **11-29**

Boiler Clearances. **6**

Burner Connection. **11**

Commissioning and Testing. ..... **36 & 37**

Electrical Connections. **30-32**

Electrical Supply. **5**

Flue Installation. **5**

Fluing. **10**

Gas Safety Regulations **4**

Gas Supply. **4**

Hydraulic Resistance. **2**

Initial Lighting. **38**

Introduction. **3**

Installation. **10**

Option Kits. **3**

Performance Data. **2**

Servicing. **28**

Ventilation. **7**

Water Circulation. **5**

Water Connections. **7**

Water System Requirements. **8**

Water Treatment. **5**

Wiring Diagrams. ..... **31 & 33**

Harrier GTE

Gas and Fuel Oil

PI No. 49AQ950

Destination Countries: GB, IE

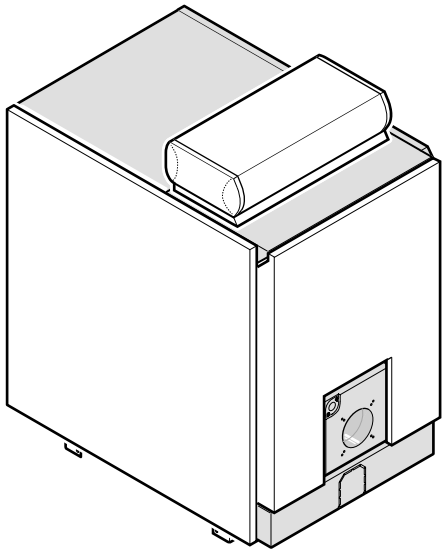

INTRODUCTION

The Harrier GTE boilers are a range of cast iron sectional pressure jet boilers offering high efficiency operation, ease of maintenance, fuel flexibility and low emissions. Suitable for oil or gas operation the Harrier GTE range is supplied in a choice of 5 standard models, rated in outputs from 105kW (358,000 Btu/h) to 330kW (1,126,000 Btu/h) and has a maximum operating pressure of 6 bar. All models may have high/low operation.

Designed with a large combustion chamber, 3 pass horizontal flue ways incorporating fins and cast iron turbulators, the Harrier GTE ensures maximum heat transfer efficiency (up to 91.5% net).

The boilers are suitable for: combined indirect pumped domestic hot water and central heating systems; independent indirect pumped domestic hot water or central heating systems.

Fully pumped systems may be open vented or sealed.

The boilers are NOT suitable for:

1. Gravity DHW systems
2. Gravity heating systems
3. Direct domestic hot water supply

Options

Flue Gas Thermometer (ID28)

Hours run meter (IC8) (may only be fitted on Deluxe control panel)

Deluxe control panel (FD168) with indicator lights etc.

CAUTION. To avoid the possibility of injury during the installation, servicing or cleaning of this appliance, care should be taken when handling edges of sheet steel components.

SAFETY

Current Gas Safety (Installation and Use) Regulations or rules in force.

It is law that all gas appliances are installed and serviced by a CORGI registered installer in accordance with the regulations below. Failure to install appliances correctly could lead to prosecution. It is in your own interest, and that of safety, to ensure the law is complied with.

The following must be conformed with:

Current Building Regulations and Clean Air Act

Water Authority Regulations

Local Authority Regulations and Regional Bylaws

Gas Safety Regulations

Any special regional requirements of local Electricity and Gas undertaking.

Fire Service and Insurance Company requirements.

In the interests of safety, a competent installer should be employed to effect the installation of the appliance. Manufacturer's notes must NOT, in any way, be taken as over riding statutory obligations.

The installation of the boiler MUST also be in accordance with the latest I.E.E. (BS7671) Wiring Regulations, local buildings regulations, bye-laws of the local water authority, the building regulations and the Building Standards (Scotland) and any relevant requirements of the local authority.

Detailed recommendations are contained in the following Codes of Practice:

BS 799 Pt4 & 7	Oil burning equipment.
BS 799 Pt5	Oil storage tanks.
BS 5410 Pt1	Installation for space heating and hot water supply.
BS 5854	Flues and flue structures in buildings.
BS 5885 Pt1	Gas burners - with inputs 60kW and above.
BS 6644	Installation of gas fired hot water boilers of rated input between 60kW and 2MW (2nd and 3rd family gases).
BS 6880	Low temperature hot water heating systems of output greater than 45kW.
Part 1	Fundamental and design considerations
Part 2	Selection of equipment.
Part 3	Installation, commissioning and maintenance.
BS 6891	Installation of low pressure gas pipework of up to 28mm (R1) in domestic premises (2nd family gas).
EN 303.1	Heating boilers with forced draught burners. General requirements.
EN 303.2	Heating boilers with forced draught burners with atomising oil burners.
EN 304	Test code for heating boilers for atomizing oil burners.
73/23 EEC	Low voltage directive. (Relevant standard is EN60335.1)
89/336 EEC	Electromagnetic Compatibility Directive. (Relevant standards are EN50081.1, EN50082.1 and EN55014.)
90/396 EEC	Gas Appliance Directive. (Relevant standards are EN303.1, EN303.2 and EN304.)
92/42 EEC	Boiler Efficiency Directive.
IGE/UP/1	Soundness testing and purging of industrial and commercial gas installation.
IGE/UP/2	Gas installation pipework, boosters and compressors on industrial and commercial premises.
IGE/UP/10	Installation of gas appliances in industrial and commercial premises.

SAFE HANDLING OF SUBSTANCES

Care should be taken when handling the boiler insulation panels, which can cause irritation to the skin. No asbestos, mercury or CFCs are included in any part of the boiler or its manufacture.

GAS SUPPLY

The local gas supplier should be consulted, at the installation planning stage, in order to establish the availability of an adequate supply of gas. An existing service pipe must NOT be used without prior consultation with the local gas supplier.

A gas meter can only be connected by the local gas supplier or by a registered CORGI engineer.

An existing meter should be checked, preferably by the gas supplier, to ensure that the meter is adequate to deal with the rate of gas supply required. A minimum working gas pressure of 17.5mbar MUST be available at the boiler inlet for Natural gas and 37mbar for Propane.

Do not use pipes of smaller size than the burner inlet gas connection.

The complete installation MUST be tested for gas soundness and purged in accordance with the appropriate standards listed on page 4.

Gas Boosters

A gas booster is required if the gas pressure available at the burner is lower than that required by the burner manufacturer to attain the flow rate for maximum burner input rating.

Location of the booster requires careful consideration but should preferably be closer to the burner rather than the gas meter. Ventilation should also be considered to ensure ambient temperatures do not exceed designed recommendations. Further guidance is provided in IGE/UP/2 as listed above.

Assembly and Installation Instructions for Ideal Harrier GTE heating boilers should be read in conjunction with the general technical data tables enclosed and any other technical publication supplied with the burner.

NOTE TO THE INSTALLER: LEAVE THESE INSTRUCTIONS ADJACENT TO THE BOILER.

FLUE INSTALLATION

IMPORTANT
It is the responsibility of the installer to ensure, in practice, that products of combustion discharging from the terminal cannot re-enter the building or any other adjacent building through ventilators, windows, doors, other sources of natural air infiltration, or forced ventilation / air conditioning.

If this should occur the appliance MUST be turned OFF, labelled as 'unsafe' and corrective action taken.

The flue must be installed in accordance with the appropriate standards listed on page 4.

WATER CIRCULATION SYSTEM

The system pump MUST be connected to the boiler.

The boiler must NOT be used for direct hot water supply. The hot water storage cylinder MUST be of the indirect type.

The appliances are NOT suitable for gravity central heating nor are they suitable for the provision of gravity domestic hot water.

The hot water cylinder and ancillary pipework, not forming part of the useful heating surface, should be lagged to prevent heat loss and any possible freezing - particularly where pipes run through roof spaces and ventilated underfloor spaces.

The boiler must be vented.

Draining taps MUST be located in accessible positions, which permit the draining of the whole system - including the boiler and hot water storage vessel. They should be at least 1/2" BSP nominal size and be in accordance with BS. 2879.

The central heating system should be in accordance with the relevant standards listed on page 4.

Due to the compact nature of the boiler the heat stored within the castings at the point of shutdown of the burner must be dissipated in order to avoid overheating. In order to allow pump operation after burner shutdown the boiler control system should incorporate a pump overrun device.

WATER TREATMENT FOR HOT WATER AND HEATING BOILERS

There is a basic need to treat the water contained in all heating and indirect water systems, particularly open vented systems. It is assumed, incorrectly, that because boilers are operating in conjunction with what is apparently a closed circuit an open vented system will not, under normal circumstances, allow damage or loss of efficiency due to hardness salts and corrosion once the initial charge of water has been heated up a few times.

1mm of lime reduces the heat transfer from metal to water by 10%.

In practice the deposition of these salts is liable to cause noises from the boiler body or even premature boiler failure. Corrosion and the formation of black iron oxide sludge will ultimately result in premature radiator failure.

Open vented systems are not completely sealed from the atmosphere if proper venting and expansion of system water is to be achieved. The same tank is used to fill the system with water and it is through the cold feed pipe that system water expands into the tank when the boiler passes heat into the system.

Conversely, when the system cools, water previously expelled is drawn back from the tank into the system together with a quantity of dissolved oxygen.

Even if leakage from the heating and hot water system is eliminated there will be evaporation losses from the surface of the tank which, depending upon ambient temperature, may be high enough to evaporate a large portion of the system water capacity over a full heating season.

There will always be corrosion within a heating or hot water system to a greater or lesser degree, irrespective of water characteristics, unless the initial fill water from the mains is treated. Even the water in closed systems will promote corrosion unless treated. For the reason stated, **Caradon Ideal Limited** strongly recommend that when necessary the systems is thoroughly cleaned, prior to the use of stable inhibitor, which does not require continual topping up to combat the effects of hardness salts and corrosion on the heat exchangers of the boiler and associated systems.

Caradon Ideal Limited advise contact directly with specialists on water treatment such as:

GE Betz Ltd, Sentinel Division, Foundry Lane,
Widnes, Cheshire, WA8 8UD,
Tel: 0151 424 5351

Fernox Manufacturing Co. Ltd., Cookson Electronics,
Forsyth Road, Sheerwater, Woking, Surrey, GU21 5RZ
Tel: 01799 521 133

Salamander Engineering Ltd., Unit 24, Reddicap Trading Estate,
Sutton Coldfield, West Midlands, B75 7BU
Tel: 0121 378 0952

ELECTRICAL SUPPLY

WARNING This appliance must be earthed.

The control system requires a 230V - 50Hz mains supply.

Wiring external to the appliance MUST be in accordance with the current I.E.E. (BS7671) Wiring Regulations and any local regulations which apply.

Burner and Pump

These may be 1ph or 3ph. Refer to manufacturer's instructions.

The point of connection to the mains should be readily accessible and adjacent to the boiler.

LOCATION OF THE BOILER

The boiler must stand on a non-combustible floor (i.e. concrete or brick) which must be flat, level and of a suitable load bearing capacity to support the weight of the boiler (when filled with water) and any ancillary equipment.

If the boiler is mounted on a plinth then the dimensions must exceed the plan area of the boiler by at least 75mm on each side.

The boiler must not be fitted outside.

1 BOILER DIMENSIONS

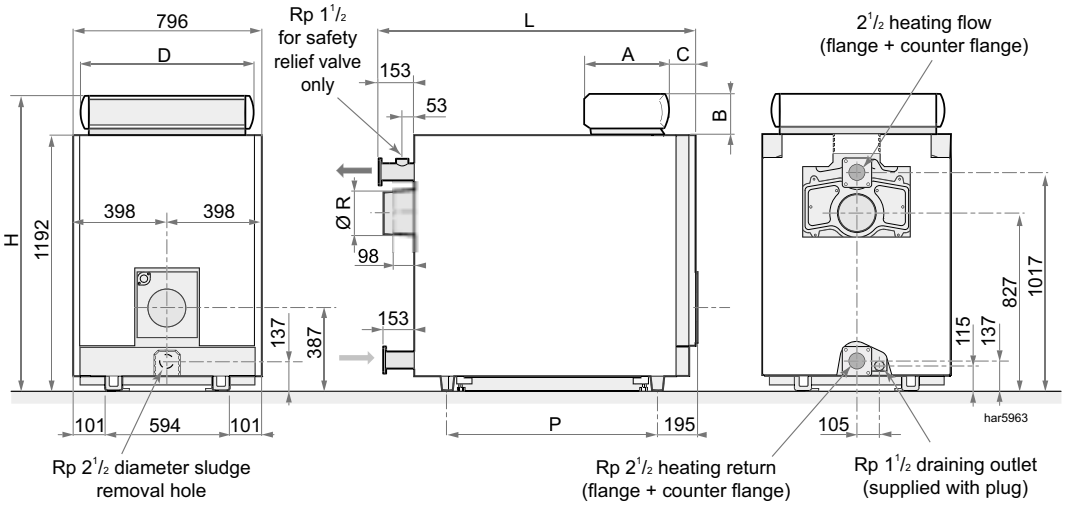

Boiler		GTE 5	GTE 6	GTE 7	GTE 8	GTE 9
Standard	A	130	130	130	130	130
Control	B	105	105	105	105	105
Panel	C	165	165	165	165	165
Fitted	D	738	738	738	738	738
	H	1297	1297	1297	1297	1297
Deluxe	A	355	355	355	355	355
Control	B	195	195	195	195	195
Panel	C	145	145	145	145	145
Fitted	D	755	755	755	755	755
	H	1387	1387	1387	1387	1387
All	L	1151	1311	1471	1631	1791
Models	P	650	810	970	1130	1290
	ØR	180	180	200	200	200

2 BOILER CLEARANCES

The minimum dimensions as indicated must be respected to ensure good access around the boiler.

Note. *To allow the inlet of the combustion air, the boiler room must be adequately ventilated, the section and the location of which must comply with local recommendations.*

Refer also to Frame 3.

The boiler must be positioned so that there is enough space available to allow the following:

- Access around the boiler for servicing.
- Space to open the boiler front door.
- Space to access the burner.

Recommended minimum clearances are as shown.

Rear 1000mm or adequate space to make the flue connections and access to the flue sample point, drain connection, flue and smokehood cleanout doors and any safety or control devices.

Sides One side may be 100mm the other side must be 200mm plus the burner projection or 500mm whichever is the greater to allow the burner door to be swung open and maintain access to the rear. In multiple boiler installations both sides may be 100mm except at one end consideration must also be given to the burner door hinge position and consequent clearance for access to the rear.

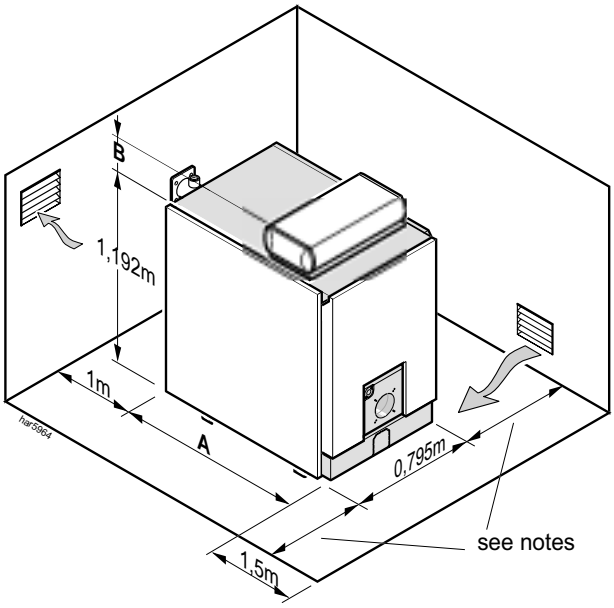

	Dimension / Boiler		GTE 5	GTE 6	GTE 7	GTE 8	GTE 9
A		mm	1000	1160	1320	1480	1640
B	Standard Control Panel	mm	105	105	105	105	105
	Deluxe Control Panel	mm	195	195	195	195	195

3 VENTILATION

Safe, efficient and trouble-free operation of conventionally flued gas boilers is vitally dependent on the provision of an adequate supply of fresh air to the room in which the appliance is installed.

Ventilation by grilles communicating directly with the outside air is required at both high and low levels. The minimum free areas of these grilles must be according to the following scale:

Total input rating of boilers	Position of air vents	Air vent areas (air direct from outside)
Up to 2 MW	HIGH LEVEL	270 cm^2 plus 2.25cm^2 per kW in excess of 60 kW total rated input
	LOW LEVEL	540 cm^2 plus 4.5cm^2 per kW in excess of 60 kW total rated input

Position ventilation grilles to avoid the risk of accidental obstruction by blockage or flooding. If further guidance on ventilation is required then consult BS 6644.

The supply of air by mechanical means to a space housing the boiler should be by mechanical inlet with natural or mechanical extraction. Mechanical extract ventilation with natural inlet must not be used.

Where a mechanical inlet and a mechanical extract system is applied, the design ventilation flow rates should be as in Table 4 of BS 6644.

Note.

For mechanical ventilation systems an automatic control should be provided to cause safety shutdown or lockout of the boiler(s) in the event of failure of air flow in either inlet or extract fans.

IMPORTANT. The use of an extractor fan in the same room as the boiler (or in an adjacent communicating room) can, in certain conditions, adversely affect the safe operation of the boiler.

Where such a fan is already fitted (or if it is intended to fit an extractor fan after installation of the appliance) the advice of the gas supplier should be obtained.

The temperature within a boiler room shall not exceed 25ºC within 100 mm of the floor, 32ºC at mid height and 40ºC within 100 mm of the ceiling.

4 BOILER WATER CONNECTIONS

Flow and return connections are positioned at the rear of the boiler.

The flow and returns are provided with 2 ½"/65DN flanged connections.

A Rp 1 ½ drain connection is provided at the bottom of the boiler rear section.

A Rp 2 ½ connection is provided for sludge removal at the bottom of the boiler front section.

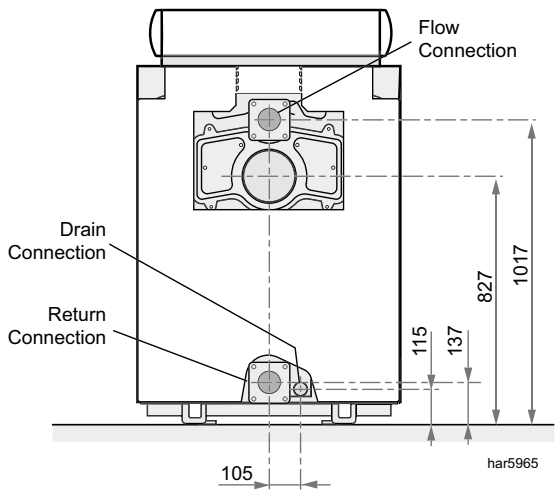

5 FILLING THE SYSTEM

Filling shall be performed with a low flow rate from a low point in the boiler room in order to ensure that all the air in the boiler is bled from the high point of the system.

Always stop the pump before filling.

IMPORTANT. Instructions for starting up the boiler for the first time after the system is fully or partly drained:

If all the air is not bled naturally to an expansion tank which is open vented, the system must include manual bleed valves, in addition to automatic air vents which bleed the system when it is operating. The manual bleed valves are used to bleed all the high points of the system and to make sure that the filled system is free of air before the burner is turned on.

General

Recommendations relating to the water system are contained in BS. 6880.

6 OPEN VENTED SYSTEM REQUIREMENTS - minimum static head requirements

The Harrier GTE boiler has a minimum static head requirement of 2.5 metres (8 feet approx.) depending on the particular characteristics of the system design (see diagram). The information provided is based on the following assumptions.

1. An open vent/safety pipe connection is made immediately after the flow connection.
2. A cold feed/expansion pipe connection is made to the system return pipe within 0.75m of the boiler return connection.
3. The maximum flow rate through the boiler is based on a temperature difference of 11ºC (20ºF) at full boiler output with the circulating pump positioned in the flow of the system.
4. The boiler is at the highest point of the system. Systems designed to rise above the flow connections will, of course, automatically require a minimum static head higher than shown.
5. The position of the open vent/safety pipe above the expansion cistern water level is given as a guide only. The final position will depend upon particular characteristics of the system. Pumping over of water into the expansion cistern should be avoided.
6. Both open vent/safety pipe and cold feed/expansion pipes must be of adequate diameter to suit the output of the boiler (see table below).

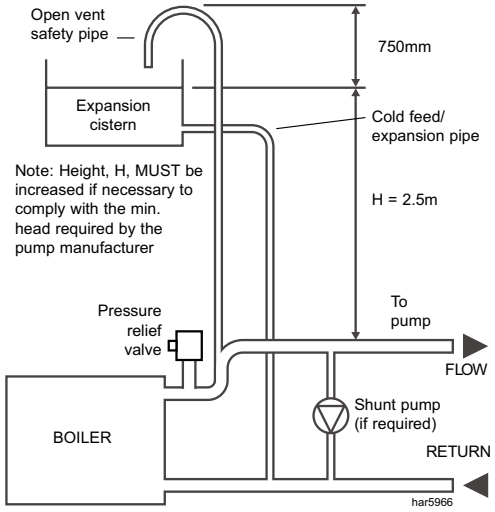

This diagram does not show safety valves & water flow switches etc necessary for safe operation

Boiler Output kW	Open Vent (mm)	Cold Feed (mm)
60 to 150	32	25
151 to 300	38	32
301 to 600	50	38

7 SEALED (PRESSURISED) SYSTEMS

Working pressure 6 bar maximum.

Particular reference should be made to BS. 6644: Section 2; Subsection 11 and Guidance note PM5 "Automatically controlled steam and hot water boilers" published by the Health and Safety Executive.

The information and guidance given below is not intended to override any requirements of either of the above publications or the requirements of the local authority, as or water undertakings.

In general commercial closed pressurised systems are provided with either manual or automatic water make up.

In both instances it will be necessary to fit automatic controls intended to protect the boiler, circulating system and ancillary equipment by shutting down the boiler plant if a potentially hazardous situation should arise.

Examples of such situations are low water level and operating pressure or excessive pressure within the system. Depending on circumstances, controls will need to be either manual or automatic reset. In the event of a shutdown both visual and audible alarms may be necessary.

Expansion vessels used must comply with BS. 4814 and must be sized on the basis of the total system volume and initial charge pressure.

Initial minimum charge pressure should not be less than 0.5 bar (7.2psi) and must take account of the static head and specification of the pressurising equipment. The maximum water temperatures permissible at the point of minimum pressure in the system are specified in Guidance Note PM5.

When make up water is not provided automatically it will be necessary to fit controls which shut down the plant in the event of the maximum system pressure approaching to within 0.35bar (5psi) of the safety valve setting.

Other British Standards applicable to commercial sealed systems are:

BS. 6880: Part 2

BS. 1212

BS. 6281: Part 1

BS. 6282: Part 1

BS. 6283: Part 4

8 SYSTEM DESIGN

Minimum Water Flow

Design Flow Rates

The following table gives the flow rate required for each boiler based on a design temperature difference of 11ºC (20ºF) at the maximum rated output. For hydraulic resistance see Performance Data table (page 2).

Minimum Flow Rates

It may be necessary to fit a shunt pump to ensure minimum flow rates.

Boiler Size		GTE5	GTE6	GTE7	GTE8	GTE9
Normal water flow rate	l/s	3.04	3.91	5.00	6.08	7.17
temperature difference 11ºC (20ºF)	g.p.m.	40.1	51.6	66.0	80.2	94.6
Minimum water flow rate	l/s	0.96	1.23	1.57	1.91	2.25
temperature difference 35ºC (63ºF)	g.p.m.	12.7	16.2	20.7	25.2	29.7

9 SYSTEM DESIGN CONTINUED

System Design

Recommendations relating to water system design are contained in BS. 5410: Part 2 and BS. 6880.

System design must allow for adequate internal circulation within the boiler and sufficient heat release from the boiler body during and immediately after burner firing. Heating and/ or hot water controls should be interlocked electrically with the burner, to prevent firing when the system does not demand heat.

Depending on system design it may be necessary to interrupt electrical supply to the burner before any mixing valves are completely closed to the boiler flow. This will dissipate residual heat. Also a pump overrun of at least 5 minutes is required on plant shutdown to avoid interference trip out of the overheat thermostat. If system return temperature remains below 30ºC for most of the heating period some protection from condensation is required.

Please contact **Caradon Ideal Limited** for further information.

Example of Installation

The example below does not cover all the possible cases of use. It is only aimed at drawing attention to the basic rules which must be complied with. In all events, comply with applicable codes of practice and national or local regulations.

Example shows a sealed system with domestic hot water production via independent calorifiers.

Typical Sealed System Example

A shunt pump sized on the minimum flow rate required MUST be fitted. Provided adequate heat dissipation can be achieved at all times the shunt and DHW primary pumps only may run on during the overrun period allowing the heating pump to be switched off. This example assumes the DHW primary pump flow rate required is less than that required for the shunt pump.

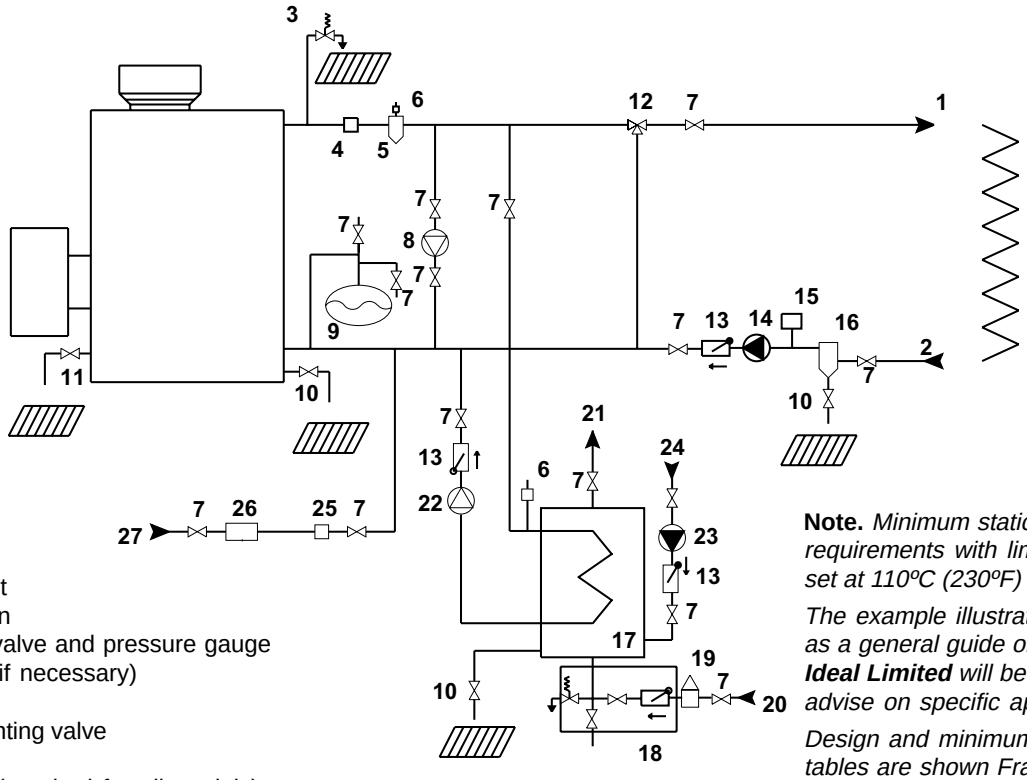

Note. *Minimum static head requirements with limit thermostat set at 110ºC (230ºF) is 2.5m.*

The example illustrated is intended as a general guide only. ***Caradon Ideal Limited*** *will be pleased to advise on specific applications.*

Design and minimum flow rate tables are shown Frame 8.

LEGEND

1. Heating outlet
2. Heating return
3. 3 bar safety valve and pressure gauge
4. Flow switch (if necessary)
5. Air separator
6. Automatic venting valve
7. Valve
8. Shunt pump (required for all models)
9. Expansion tank
10. Draining valve
11. Sludge valve
12. Mixing valve
13. Non return valve
14. Heating pump
15. Low-water safety pressure-sensitive switch
16. Sludge decanting pot (particularly recommended for older heating systems)
17. Independent calorifier
18. Sealed safety unit calibrated to 7 bar with indicator type discharger
19. Pressure reducer (if mains press >5.5 bar)
20. Domestic cold water inlet
21. Domestic hot water outlet
22. DHW pump
23. DHW circulation pump (optional)
24. DHW circulation loop return
25. Water meter (if any)
26. Water treatment for hard water
27. Heating circuit filling (with disconnecter if required under applicable regulations).

10 FLUING

According to the output, the difference between the temperature of the flue gas and the ambient temperature can be as low as 160ºC. The installer will have to respect all of the usual precautions (dilution - piping - T for removal of condensation) in order to prevent deterioration of the chimney. The use of a draught stabiliser is also recommended.

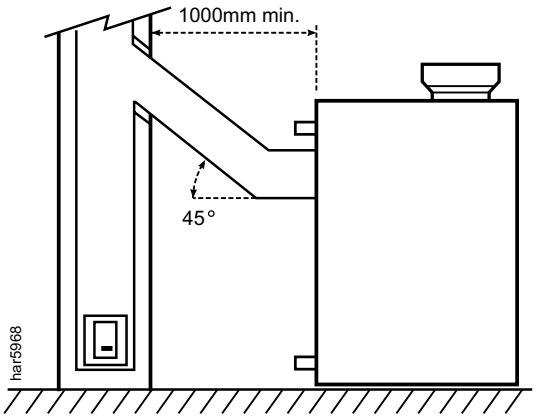

FLUE SIZE

Refer to applicable regulations while determining the size and height of the flue. Please note that Harrier GTE boilers have pressurised and sealed combustion chambers and that the pressure at the outlet must not exceed 0 mbar.

Detailed recommendations relating to the design of flues for GAS fired appliances are quoted in BS. 6644 and IGE/UP/10, whilst BS. 5410 Pt. 1 similarly applies to OIL fired boilers.

The table below contains the minimum dimensions of the flue required for each boiler model in order to ensure sufficient draught at the outlet.

However, care must be taken to comply with any applicable national or local regulations.

Boiler	Heat Output	Required Draught	Mass Flow of Flue Gases kg/s		Flue Gas Temperature (1) (2)	Chimney: Minimum Recommended Diameter
	kW	mbar	Fuel Oil 13% CO_2	Natural Gas 9.5% CO_2	ºC	Ø min mm
GTE 5	105-140	0	0.060	0.066	210	180
GTE 6	140-180	0	0.076	0.084	210	180
GTE 7	180-230	0	0.097	0.107	210	200
GTE 8	230-280	0	0.118	0.130	210	200
GTE 9	280-330	0	0.139	0.152	210	200

(1) : at boiler maximum input.
(2) : Boiler flow temperature: 80ºC (ambient temperature : 20ºC).

11 DIMENSIONAL INFORMATION REQUIRED FOR THE FLUE CONNECTION

Connection

The connection must be made in a competent manner with airtight pipe in a material that is resistant to hot gases from the combustion and possible acid condensation. This pipe must be as short as possible, be removable and without any sudden change in its section.

The diameter must always be at least equal to that of the boiler outlet.

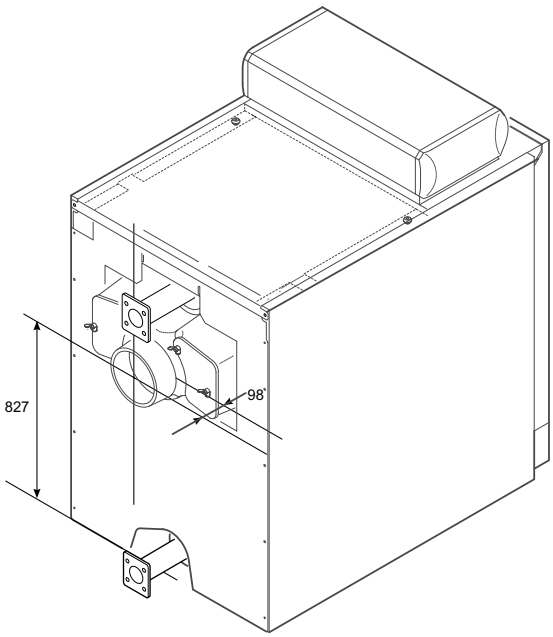

FLUE OUTLET

12 BURNER CONNECTION

Gas Supply

The gas supply MUST be sized in accordance with British Gas recommendations.

The Local Gas Authority should be contacted, at a stage prior to actual installation, for any advice or information required.

Oil Storage Tank

The oil storage tank, oil supply pipe and connections to the burner unit MUST comply with the requirements of BS. 799.

The installation should conform to the recognised standards of good practice in the trade and comply with the relevant Codes of Practice, building Regulations and Local Authority, Fire and Insurance requirements.

IMPORTANT. The burner head deflector must be in line with the door insulation as shown opposite.

Connection, adjustment, start-up and maintenance. (Refer to the instructions delivered with the burner)

Burner Door Opening and Fixings

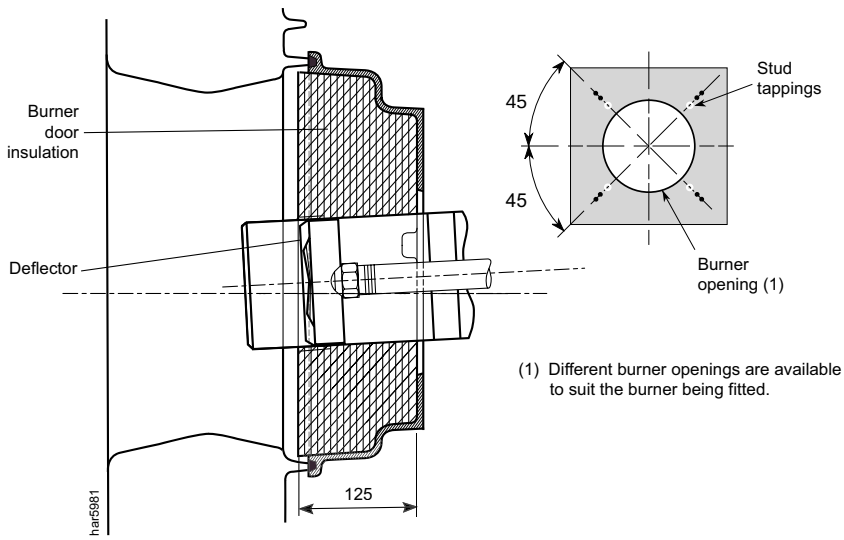

(1) Different burner openings are available to suit the burner being fitted.

13 ASSEMBLY

Packaging:

The tables below show the numbers of the packages which make up the boiler. The packages are listed in the order in which they are opened for assembly.

Tools required:

(not supplied)
- Phillips head screwdriver
- Wide flat screwdriver
- 13 and 17mm spanners
- hammer
- Silicone glue
- JDTE assembly tool
- Simplified assembly tool

Boiler	GTE 5	GTE 6	GTE 7	GTE 8	GTE 9
Boiler body delivered loose					
- front section	1	1	1	1	1
- intermediate section	3	4	5	6	7
- rear section	1	1	1	1	1
- set of assembly rods	1	1	1	1	1
- accessory package	FD10	FD11	FD12	FD13	FD14
Casing	FD169	FD170	FD171	FD172	FD173
Base Frame	FD31	FD32	FD33	FD34	FD35
Burner Door	1	1	1	1	1
Baffle Pack	ID17	ID17	ID19	ID19	ID19
IMPORTANT NOTE: For models GTE7, GTE8 and GTE9 more baffles are supplied than are required. Refer to Frames 24 and 25 for the correct quantities and location and discard any extra baffles.					
Control Panel					
- Standard	FD167	FD167	FD167	FD167	FD167
- Deluxe	FD168	FD168	FD168	FD168	FD168

The assembly of any optional devices purchased with the boiler is described in the instructions supplied with the relevant device.
The list of available optional devices is shown on page 3.

14 PREPARING THE BASE FRAME

1. Insert the inner cross members into the slots in the side components.
2. Assemble the front and rear components into the ends of the side components and secure with the 4 bolts.

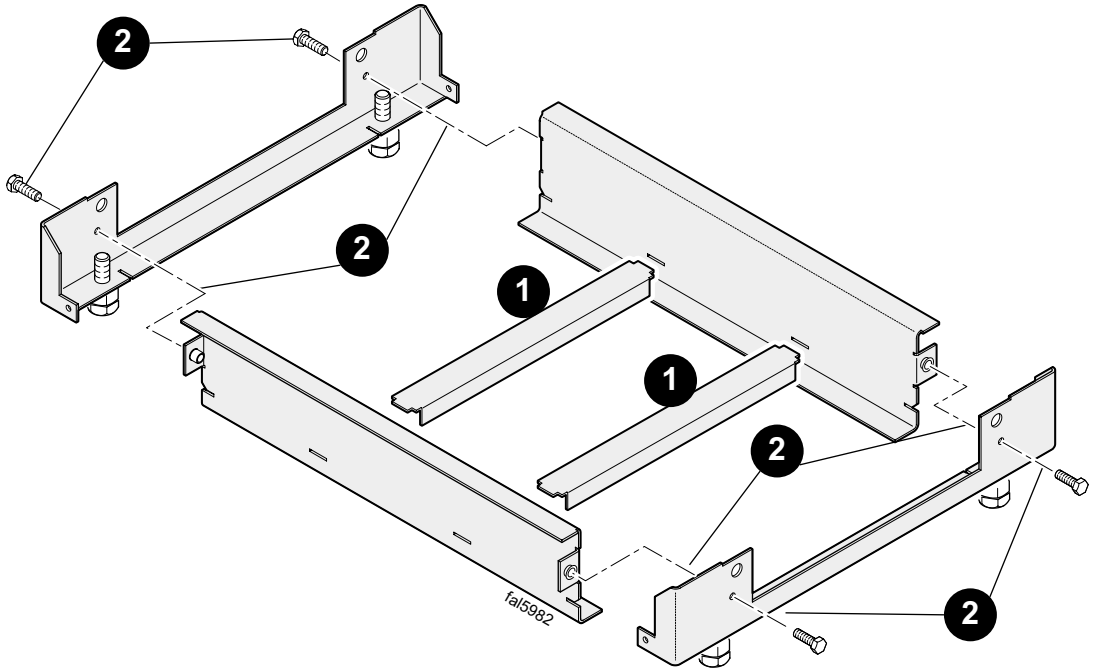

15 FITTING THE BASE FRAME INSULATION

1. Locate the insulation between the sides and end with the black fabric on the underside.

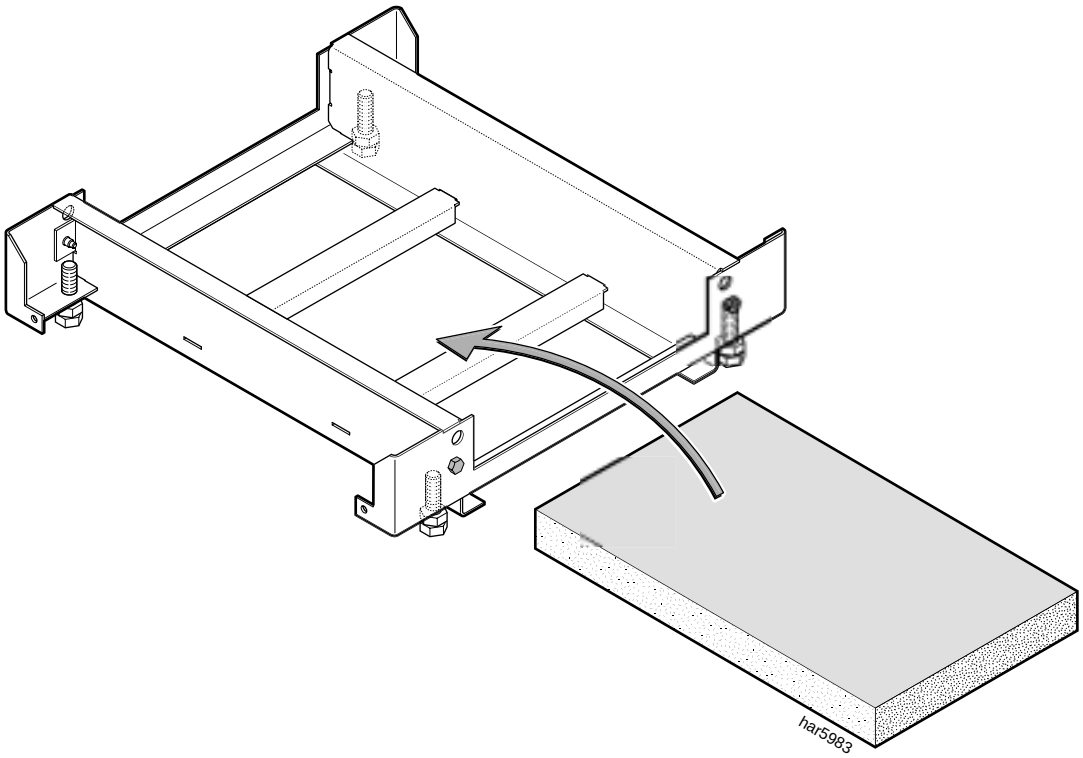

16 POSITIONING THE REAR SECTION

1. Place the rear section in its required position and support with a wooden block.
2. Position the base frame up to the rear section and insert the two lower tie rods.
3. Slide the spacer over the rear end of the threaded tie rod before passing it through the rear section
4. Pass the rods through the rear section and secure both ends with the 4 washers and M12 nuts.

   (This may be conducted after preparing the section (Frame 17) and fitting thermocord (Frame 18) if preferred.)

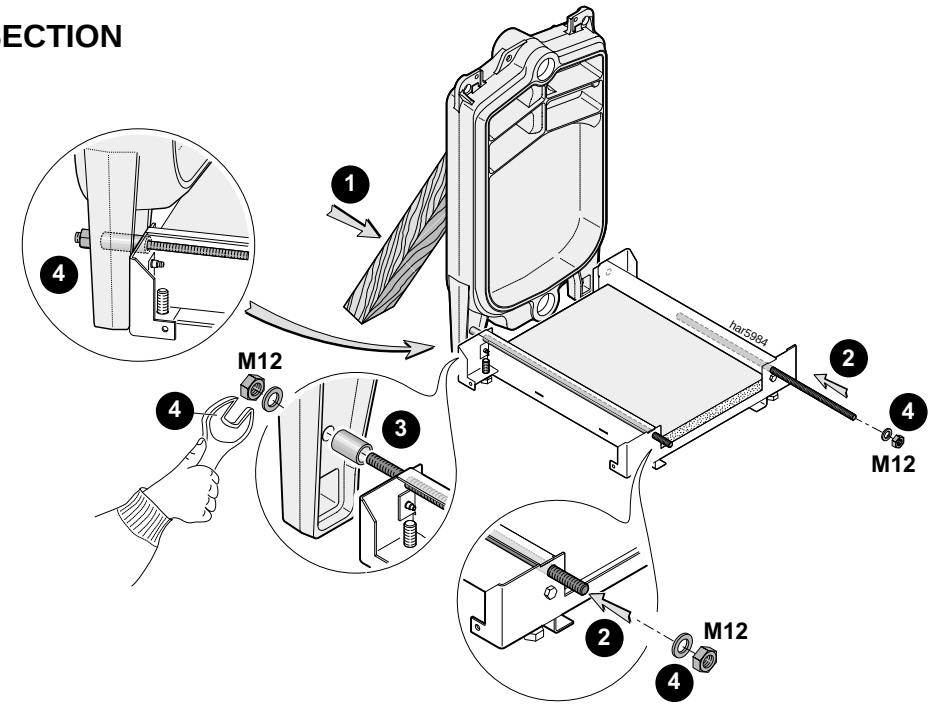

17 PREPARING THE REAR SECTION

(This may be conducted before Frame 16 with the section laid flat on the floor.)

1. Clean the nipple ports and nipples with kerosene/paraffin.
2. Coat the nipples with the coating material (linseed oil)
3. Push in the two nipples moderately.
4. Gently tap in the nipples using a wooden block to avoid damage.

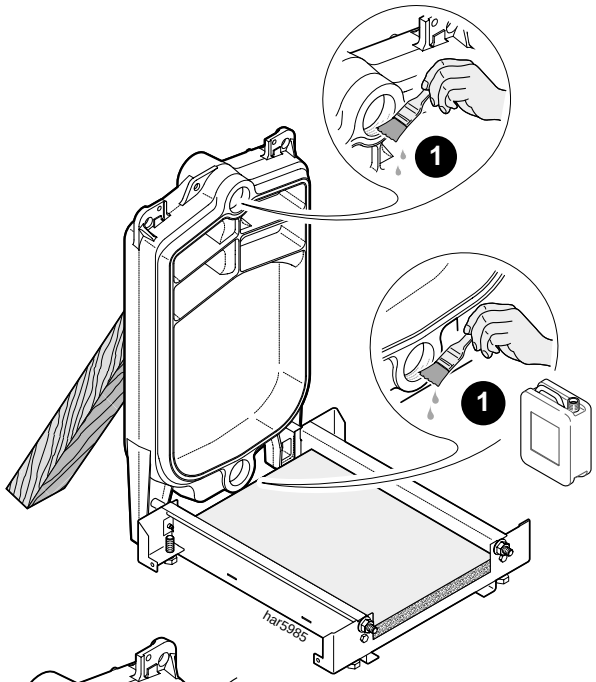

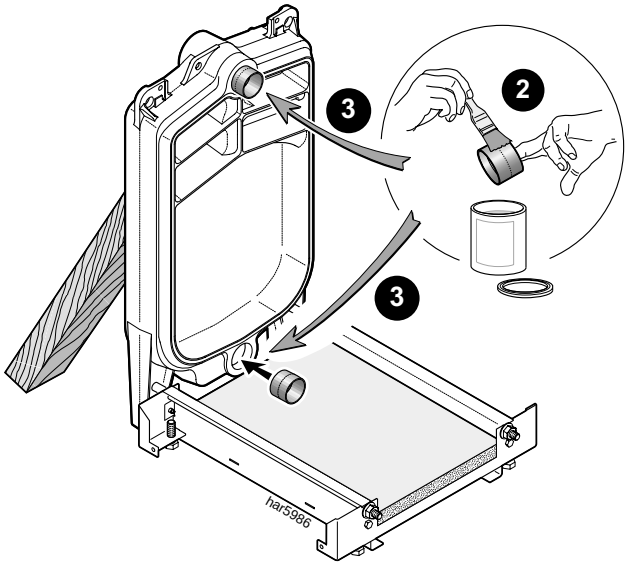

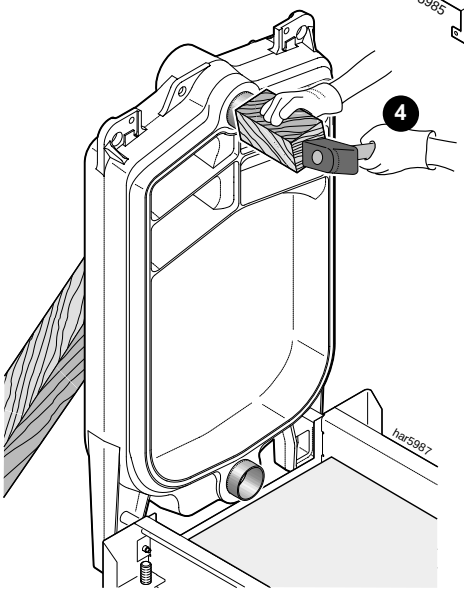

18 FITTING THE THERMOCORD

(This may be conducted before Frame 16 with the sections laid flat on the floor)

1. Put a drop of silicone at about every 200mm of the groove.

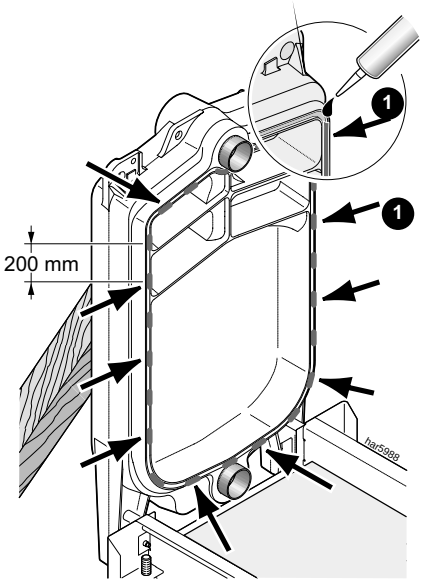

2. Working from point A, insert the thermocord into the groove.
3. Cut it to the correct length
4. Repeat for intermediate sections.

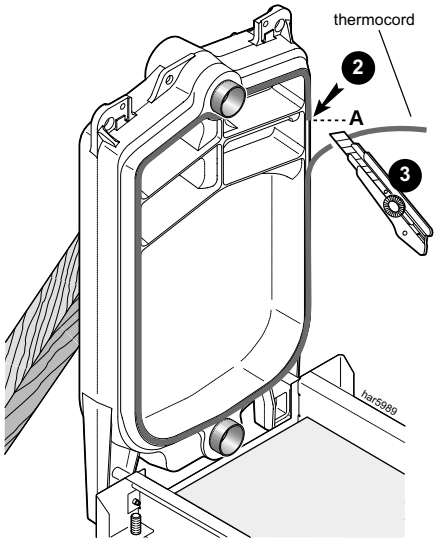

19 ASSEMBLING THE INTERMEDIATE SECTIONS

1. Place the first intermediate section onto the base frame.
2. Fit the connections of the intermediate section onto the nipples in the rear section.
3. Ensure that the thermocord fits evenly between the sections in the correct manner to make a good seal.
4. Hammer in with the help of a small wooden block.
5. Insert the assembly tool through the nipples and tighten.

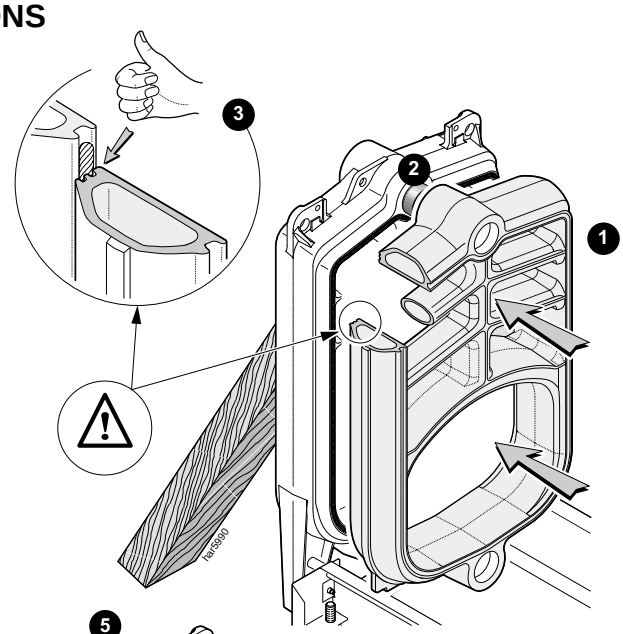

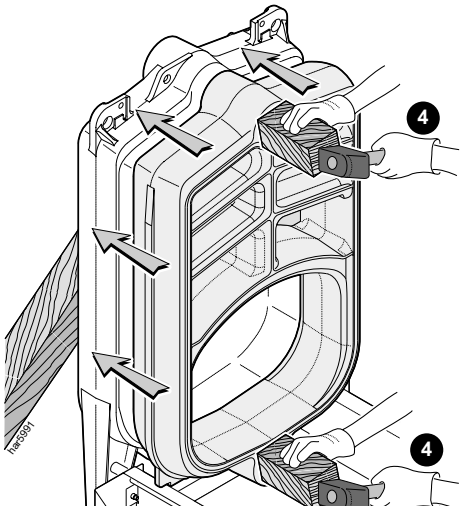

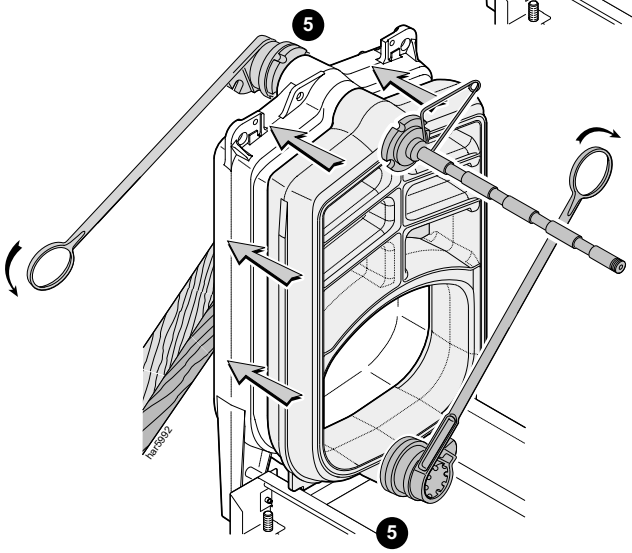

20 ASSEMBLING THE INTERMEDIATE SECTIONS CONT'D

Proceed likewise for other intermediate sections

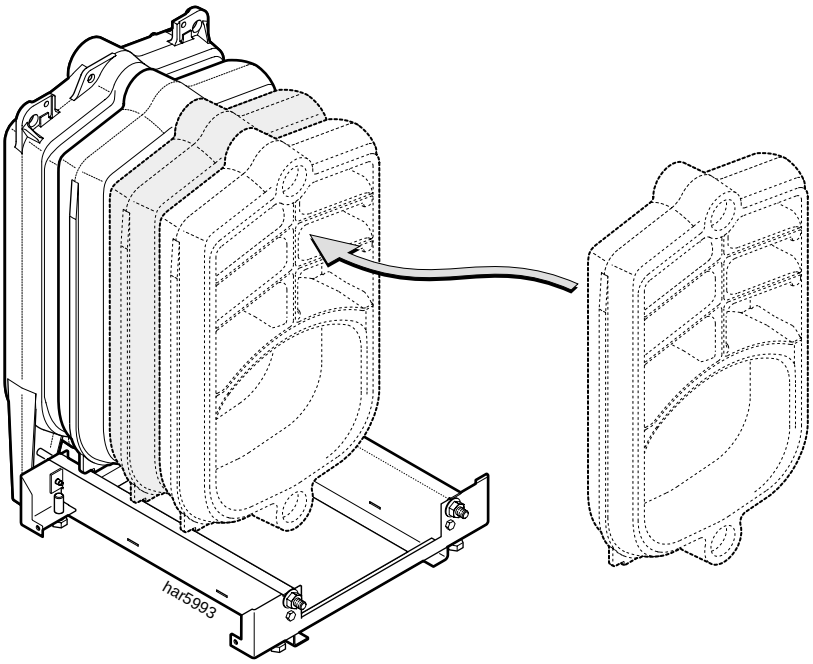

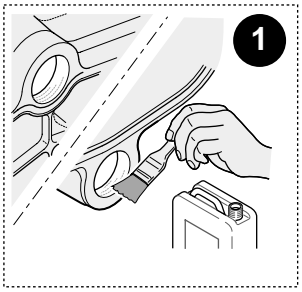

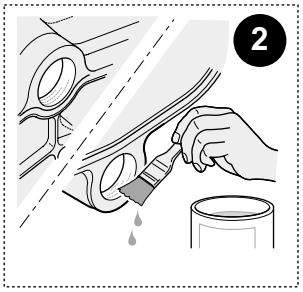

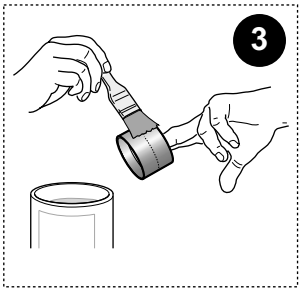

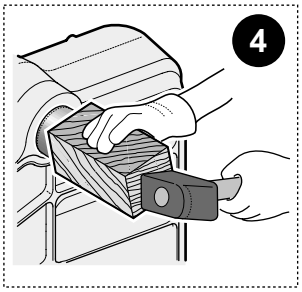

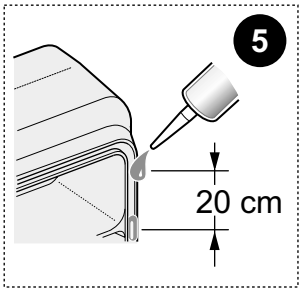

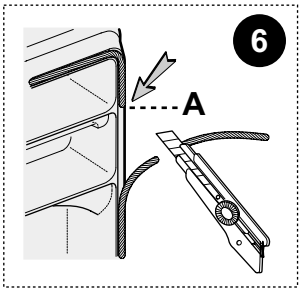

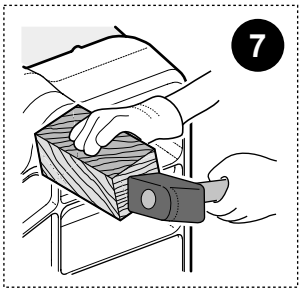

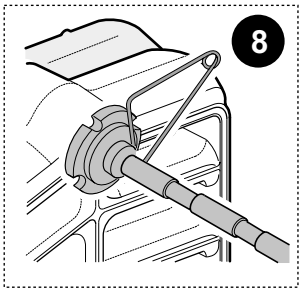

21 ASSEMBLING THE FRONT SECTION AND PULLING UP COMPLETE ASSEMBLY

1. Remove the M12 nuts and washers from the front end of the threaded rods and slide backwards.
2. Complete the assembly with the front section.
3. Insert the assembly tool through the nipples and tighten.
4. Slide the threaded tie rods through the front section and tighten to secure the complete assembly.
5. Clean off any surplus silicone.
6. Remove the assembly tool.
7. Level the boiler by adjusting its feet.

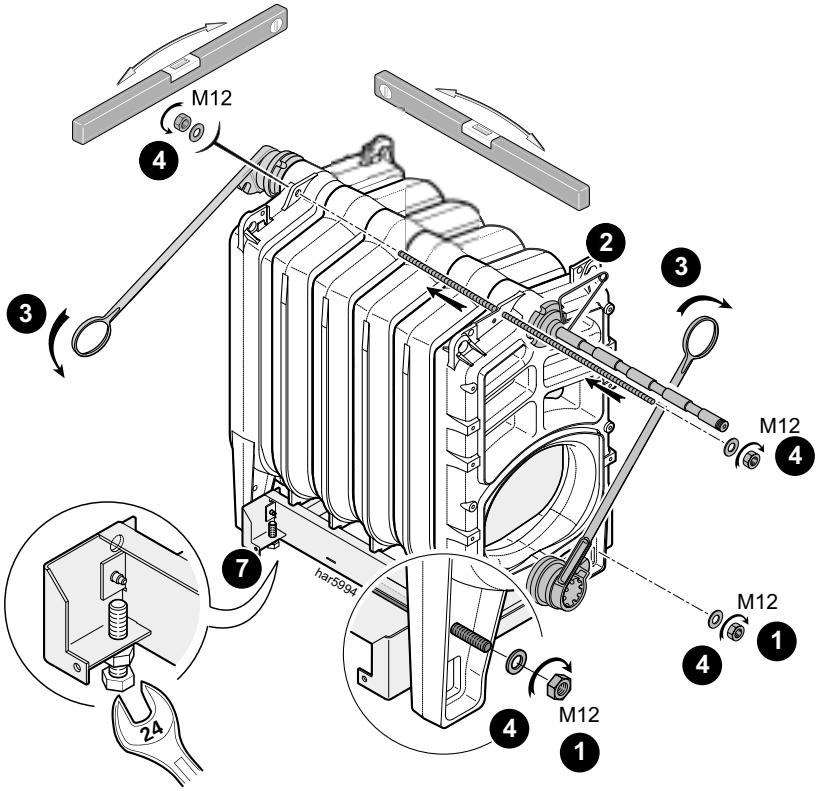

22 PREPARATION FOR FITTING THE FLUE CLEANOUT AND BURNER DOORS FOR RH OPENING

1. Screw in and tighten all the studs in the appropriate tappings as shown for items A and B.
2. Position the burner door hinge bracket and secure with two M12 nuts and washers.
3. Position the burner door catch and secure with two M12 nuts and washers.

Note. *For LH opening, exchange the position of the catch and hinge bracket.*

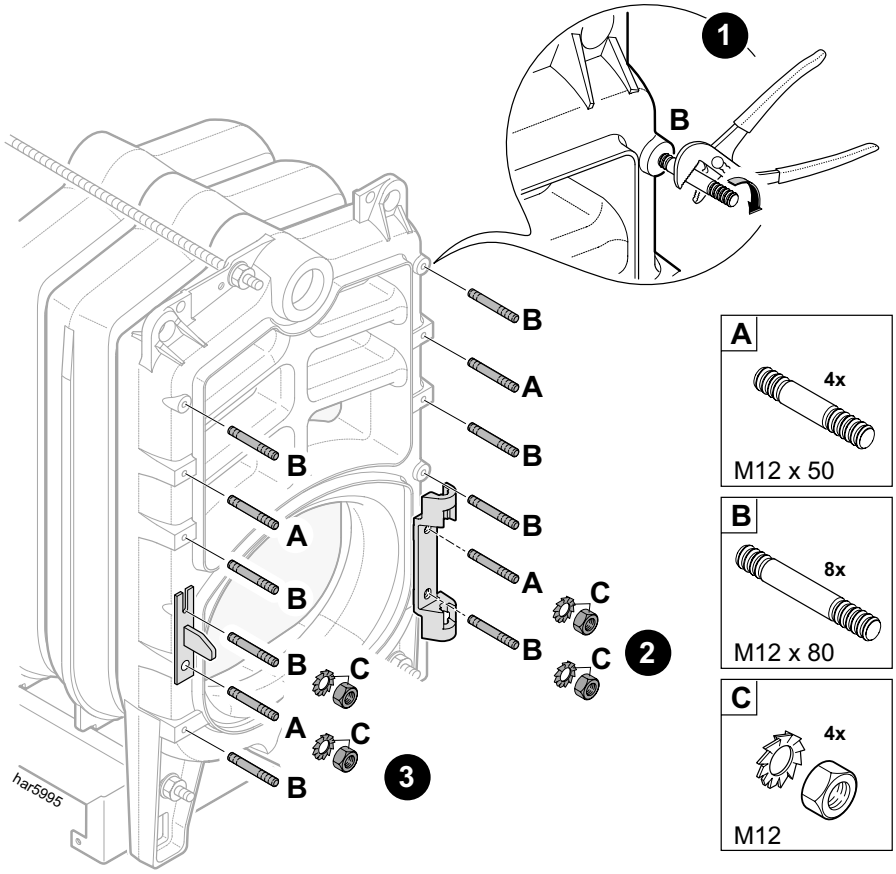

23 ASSEMBLING THE BURNER AND FLUE CLEANOUT DOORS

1. Position the Burner door in place and insert the hinge pin.
2. Close the burner door and secure evenly with four M12 nuts and washers.
3. Position the flue cleanout door hinge bracket as shown and secure with two M12 nut and washers.

Note.
For left hand opening position the hinge bracket on the left.

4. Position the flue cleanout door in place and insert the hinge pin.

Note.
Do not close and secure the door at this time.

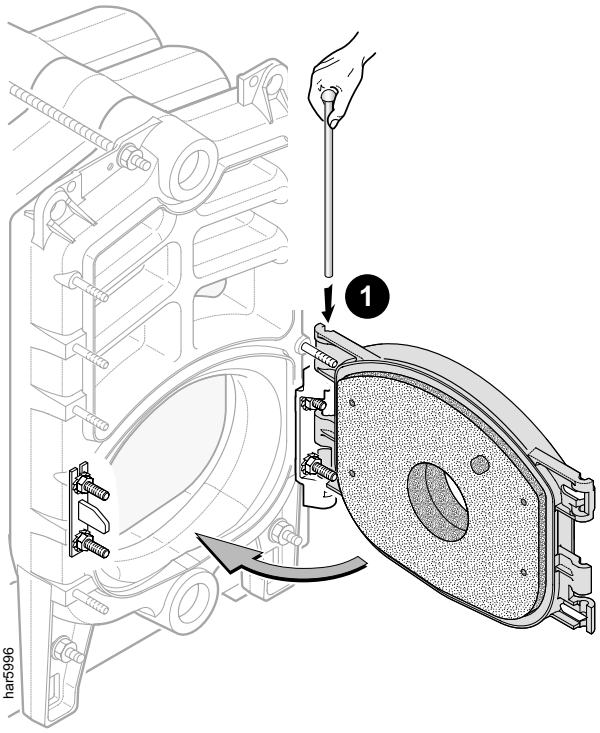

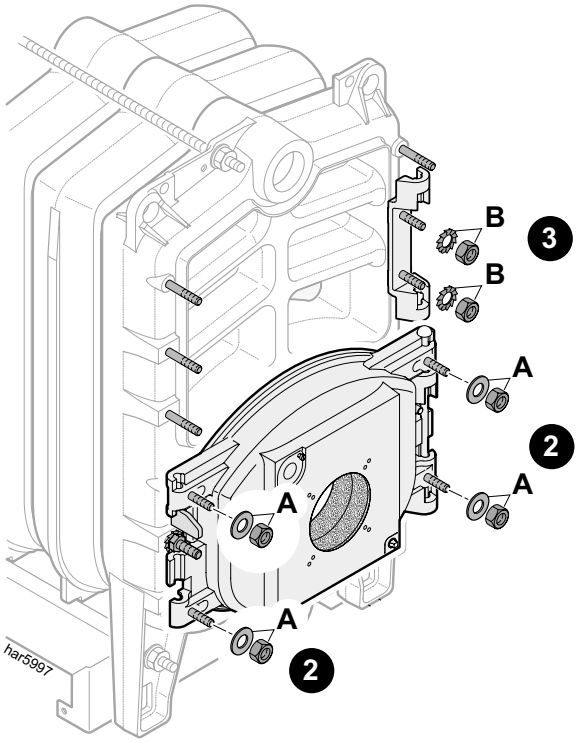

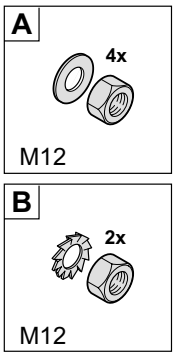

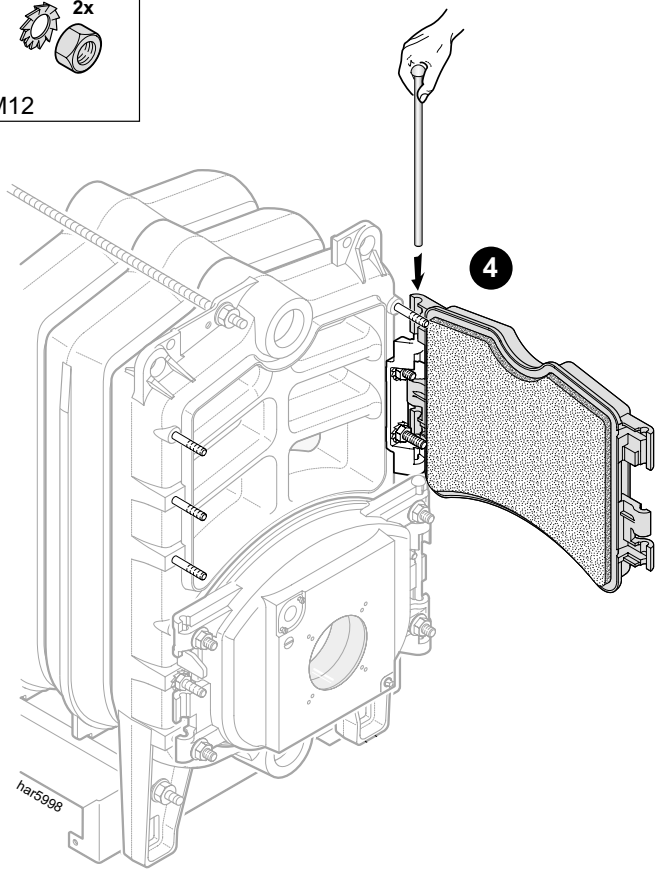

24 POSITIONING THE FLUE BAFFLES IN THE UPPER FOUR FLUEWAYS

1. **Models GTE 5 and GTE 6**. Place 2 flue baffles in each of the four upper flueways.
2. The baffles should be hooked together as shown.
3. **Models GTE 7, GTE 8 and GTE 9**. Place one flue baffle **only** in each of the four upper flueways.

IMPORTANT

The flue baffle pack for models GTE 7, GTE 8 and GTE 9 will contain two sizes of baffle. Use only the 570 mm long ones and discard the shorter ones.

4. In all cases the baffles should be pushed in to be flush with the front.

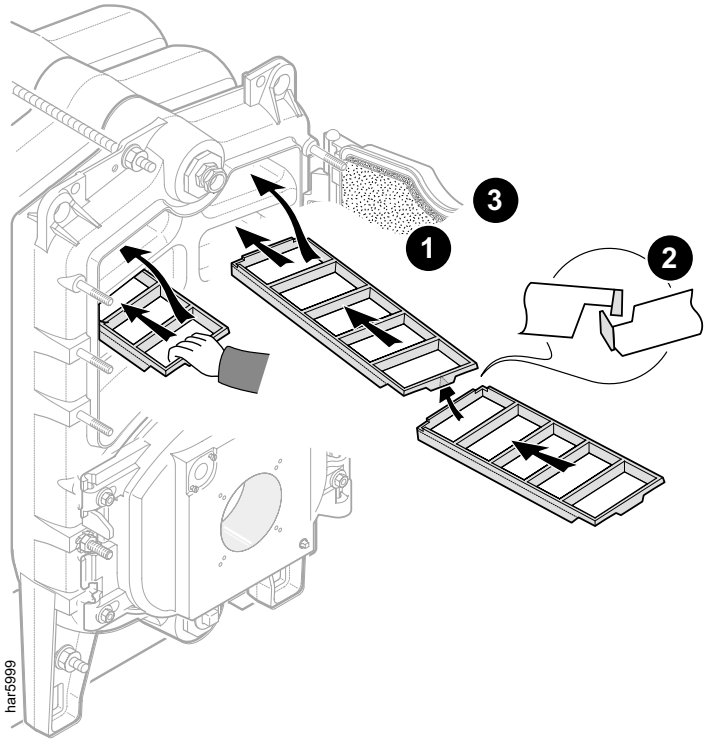

25 POSITIONING THE FLUE BAFFLES IN THE LOWER FLUEWAYS

1. **All Models**. Place one baffle in each of the two lower flue ways.
2. In all cases the flue baffles should be pushed in to be flush with the front.
3. Close the flue clean out door evenly and secure with four M12 nuts and washers in the same manner as the burner door (see Frame 23).

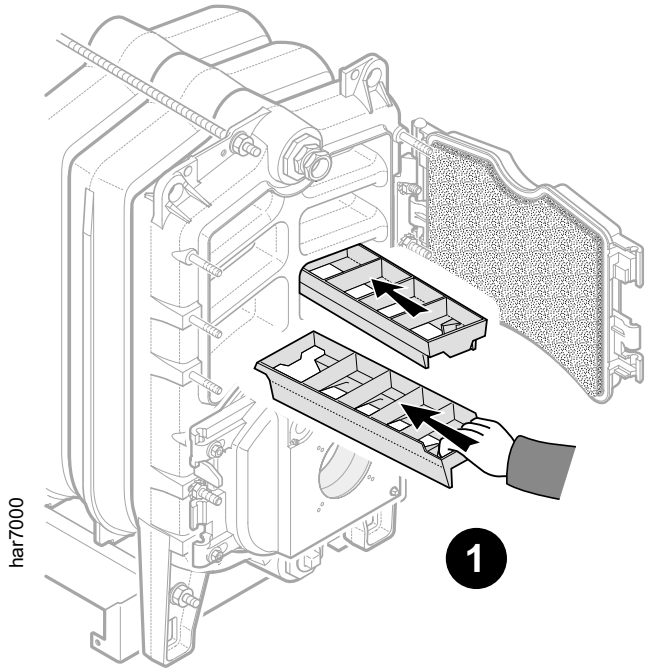

26 FITTING THE THERMOSTAT SENSOR POCKET AND PLUGGING THE UNUSED TAPPING

1. Apply some thread sealing tape or compound to the sensor pocket, reducing bush and bottom tapping plug.
2. Screw the threaded bush with the sensor pocket into the upper connection and the plug into the lower connection.

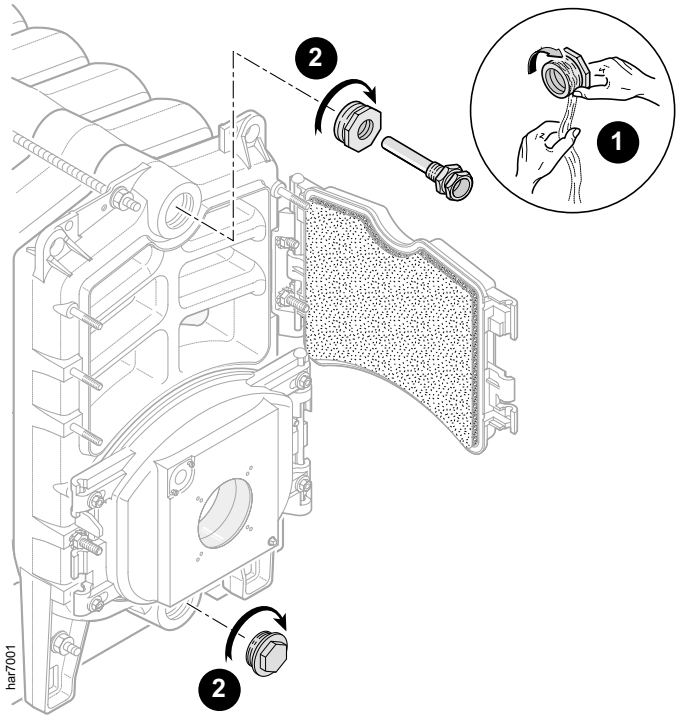

27 FITTING THE SMOKEHOOD

1. Screw the four M8 studs into the rear section.
2. Put a drop of silicone at about every 100mm of the groove.
3. Insert the thermocord into the groove.
4. Cut it to the correct length.
5. Assemble the smokehood onto the studs and secure with four flanged M8 nuts.

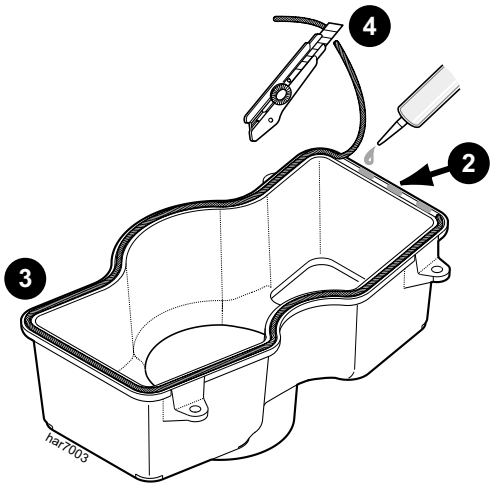

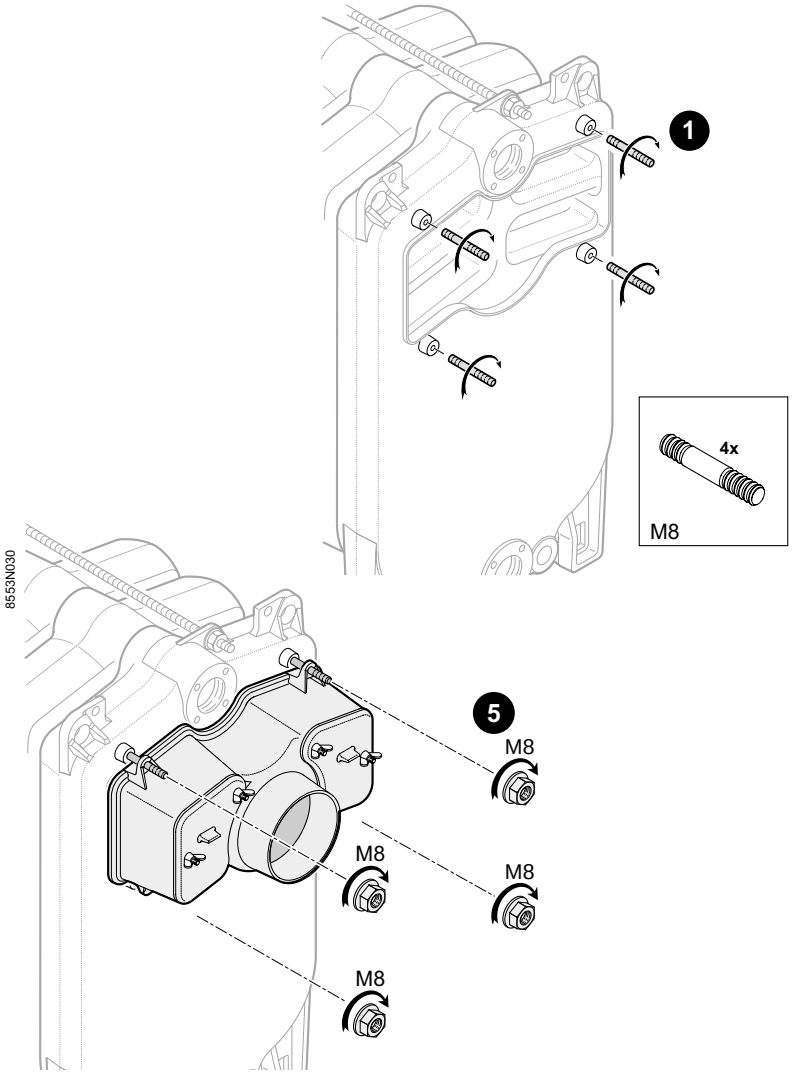

28 ASSEMBLING THE FLOW, RETURN AND DRAIN COCK

1. Coat the threaded and tapped connections of the sections, pipes and drain cock with thread sealing tape or compound (not supplied).
2. Screw the flow and return pipes and the drain cock into the rear section. (Ensure the tapping on the flow connection faces upwards to accept the pressure relief valve.)

Note.

This tapping is not to be used for venting.

3. Use plumbline to ensure the flanges are vertical and equally screwed into the tappings.

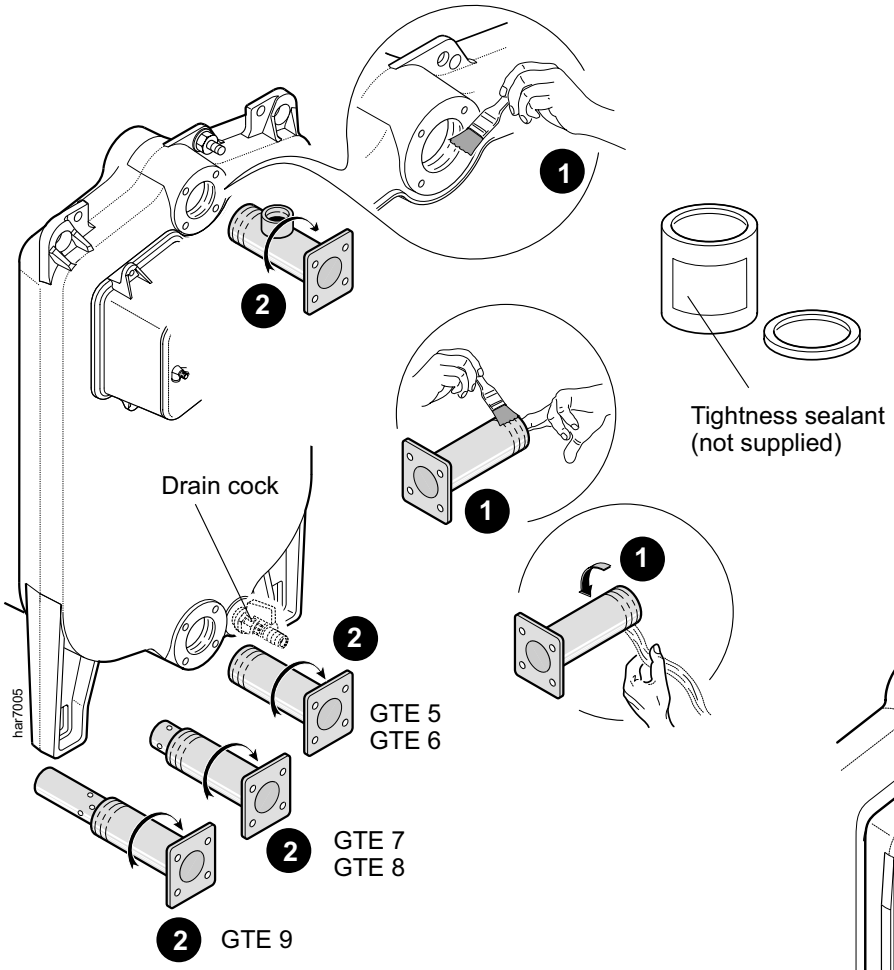

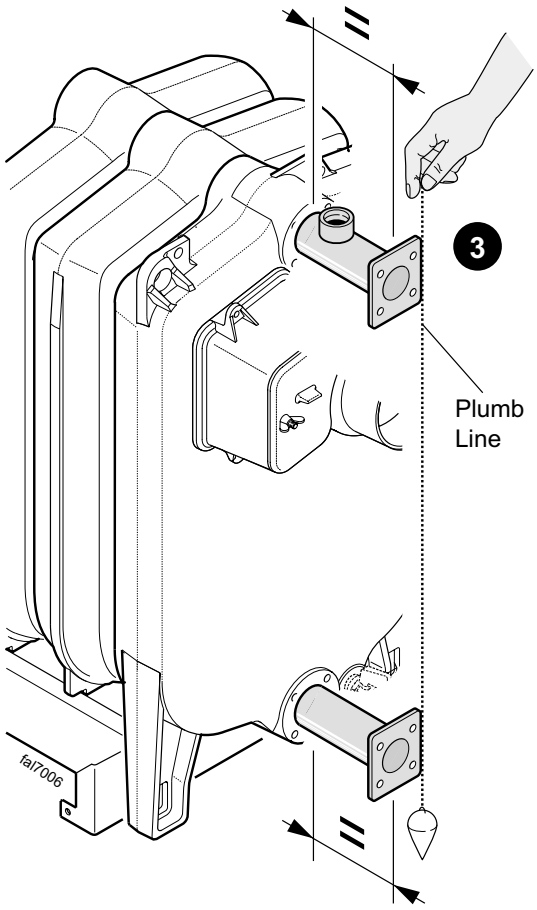

29 HYDRAULIC TEST

After assembling the boiler body, the installer must carry out a water tightness test at a pressure equal to 1.3 times the operating pressure (that is **7.8 bar minimum**) for **10 minutes at least**. The test must be done at room temperature.

1. Seal off the flow and return connections.
2. Fit a suitable supply line with valves and union connection.
3. Fit a suitable valve to vent the boiler. (Temporary only.)

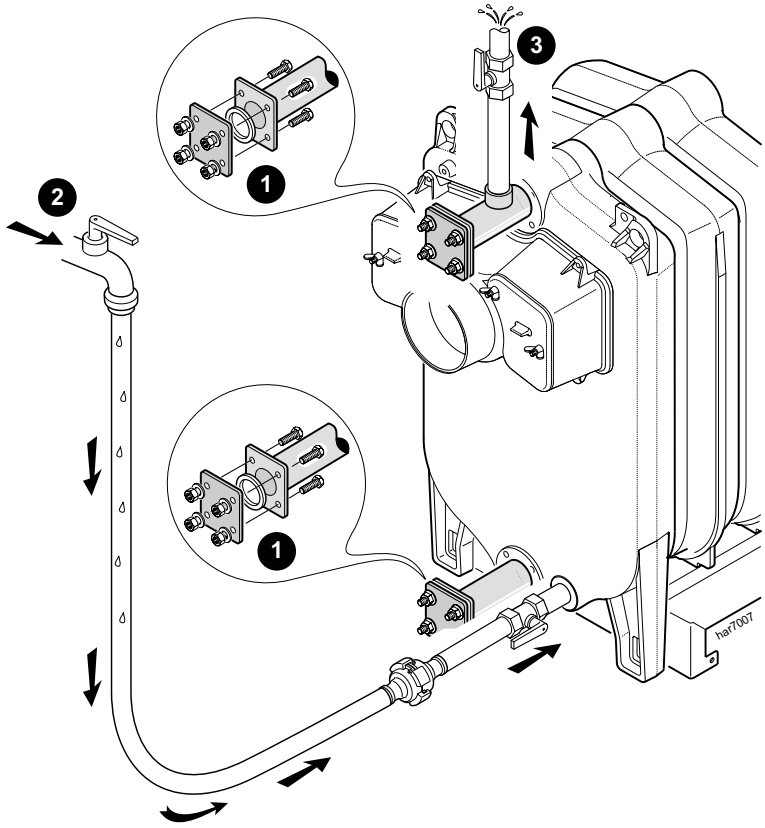

4. Fill the boiler then shut off the supply water.
5. Shut off the inlet valve.
6. Close the vent valve.
7. Disconnect the supply water.
8. Connect the pressure system water.
9. Open the fill valve.
10. Pressurise the boiler. Maintain pressure for at least **10 minutes**.

    Any drop in pressure indicates a leakage in the boiler body.
11. After successfully conducting the test, release the pressure and drain.

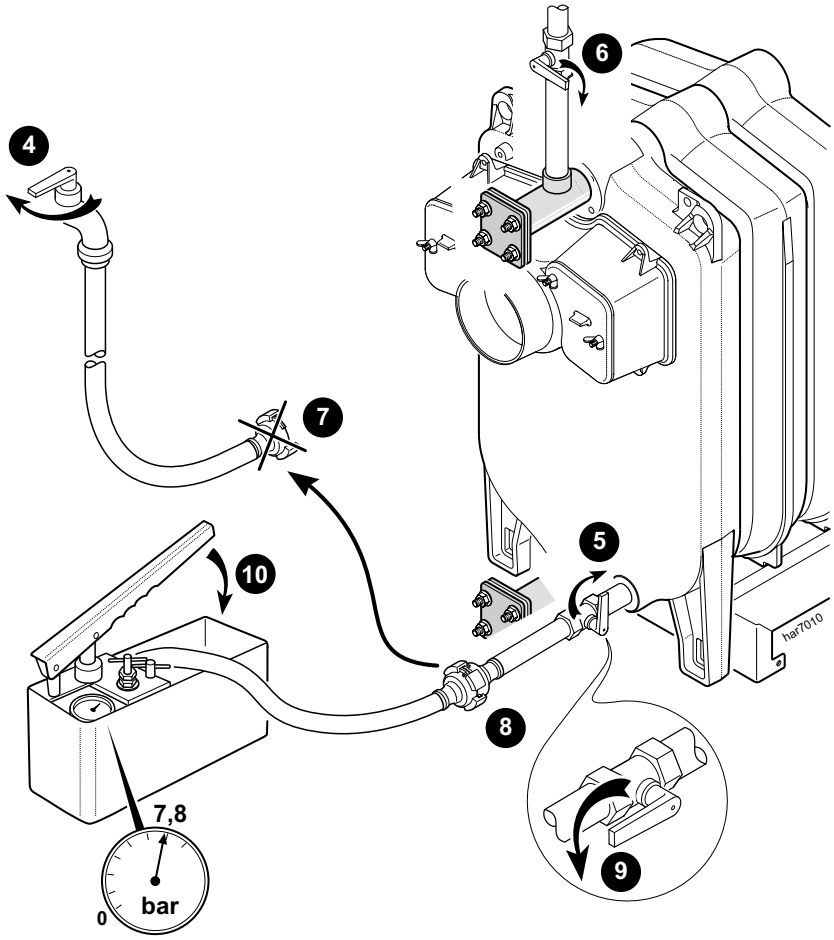

30 INSTALLING THE INSULATING MATERIAL

1. **Models GTE 5, GTE 6 and GTE 7**. Place the insulating material over the boiler, ensuring the lugs protrude through the top, wrap down the sides and tuck underneath.
2. **Models GTE 8 and GTE 9**. After fitting the front insulation similarly place the rear section.
3. Secure the two sections together using the clips provided.
4. **All Models**. Place the rear insulation into position ensuring it fits neatly over the pipe connections and flue cleanout box.
5. Secure at the top and sides using the clips provided.

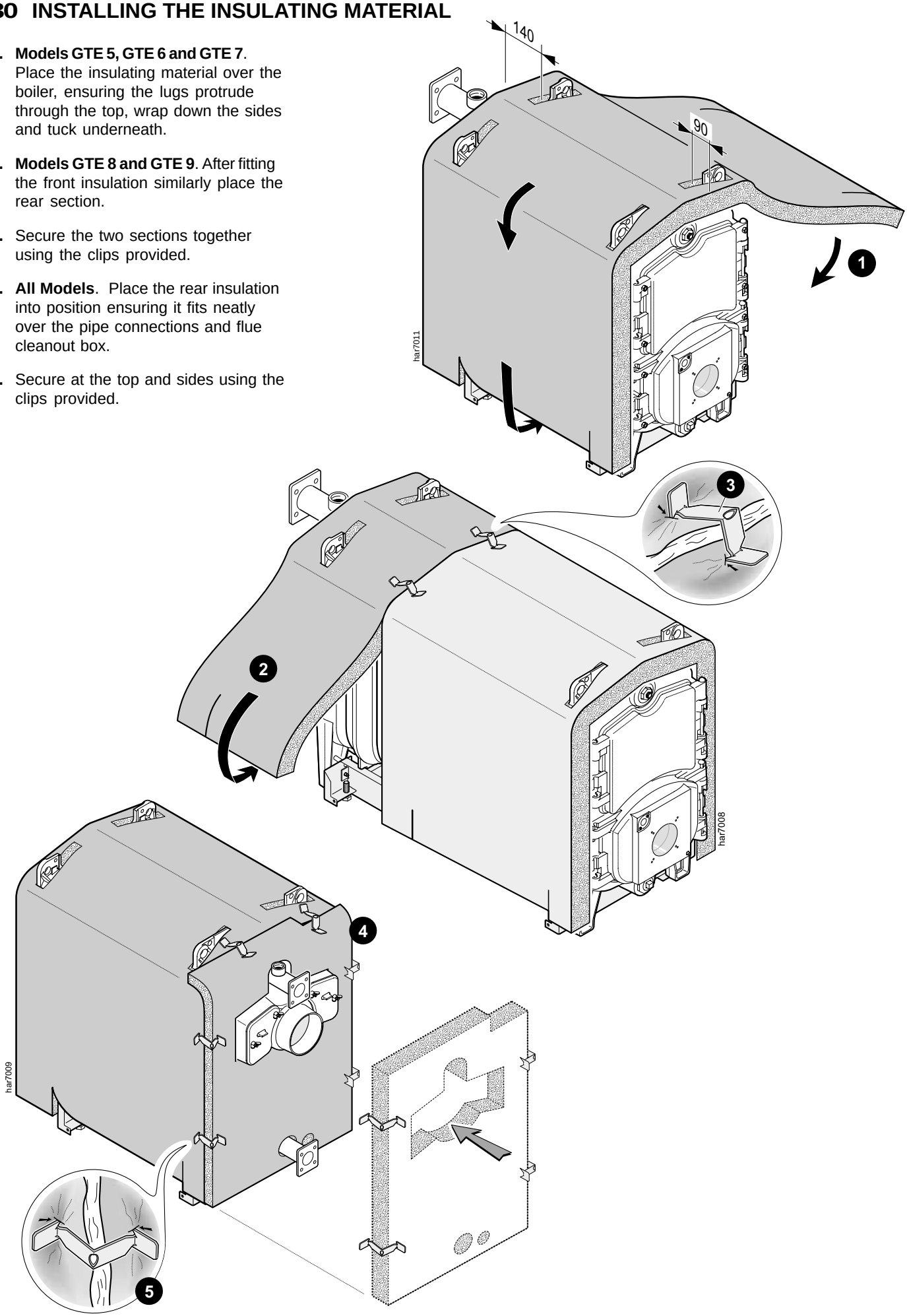

31 INSTALLING THE CASING CROSSBAR SUPPORTS

1. Fit four edge clips to the crossbars.
2. Secure the crossbars to the front and rear section lugs using the M12 bolts, washers, shakeproof washers and nuts. (Note the direction of the crossbar to ensure the edge clips fit from the front.)

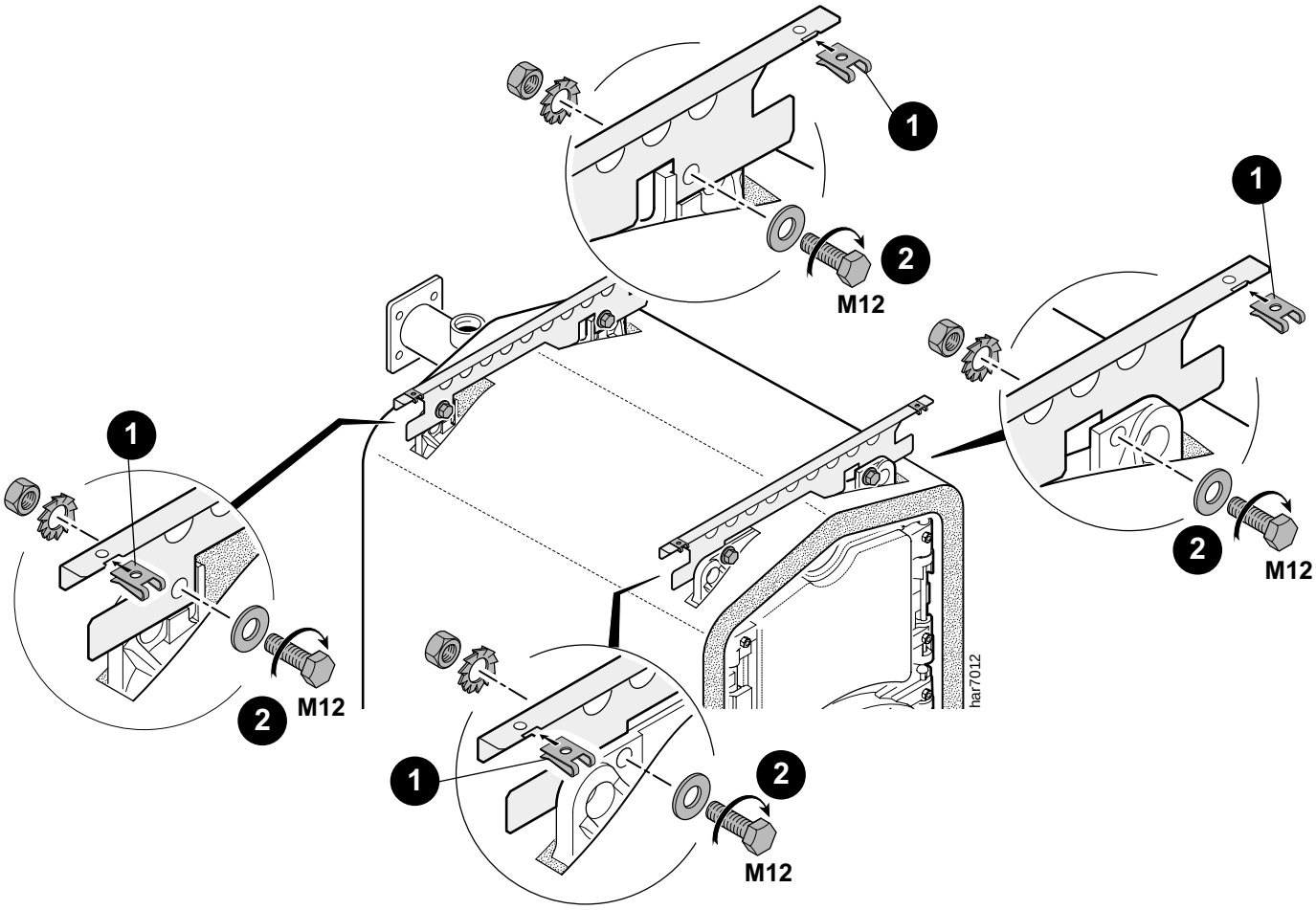

32 ASSEMBLING THE CASING SIDE PANELS

1. Fit the edge protection along the top front edges as shown.

   Note the front edges can be identified by the projection.

2. Engage the panel bottom onto the base frame.
3. Lift the panel to its vertical position.
4. Secure the top edge to the front crossbar support using M8 bolts and shakeproof washers by screwing into the edge clips.
5. Secure to the rear crossbar in the same manner.

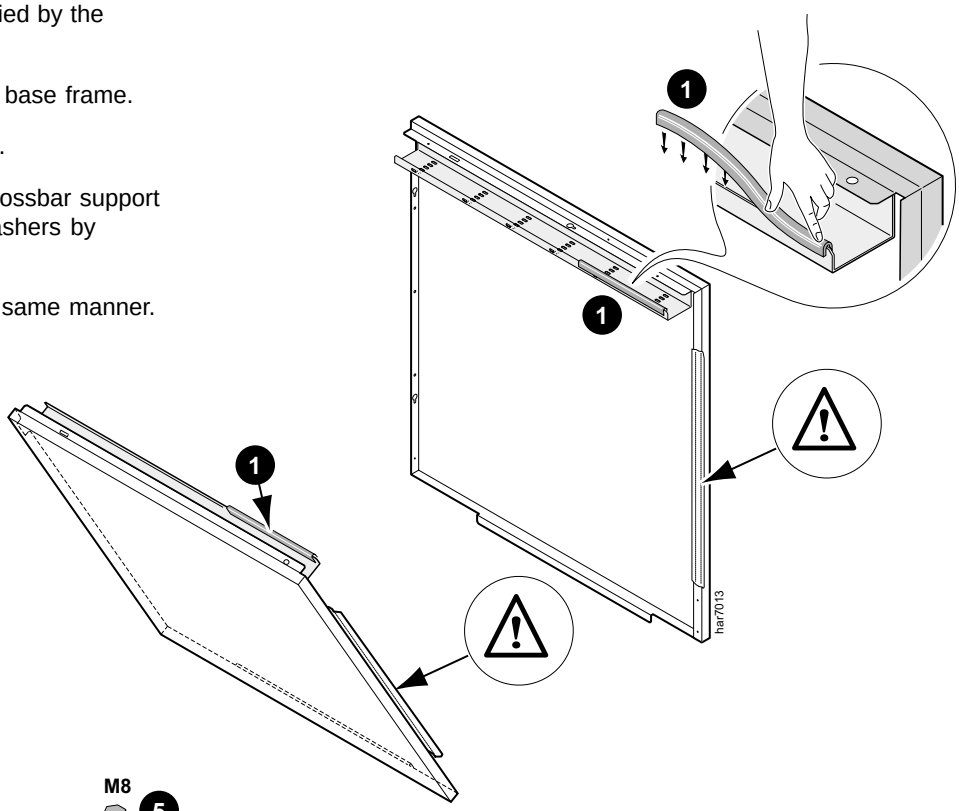

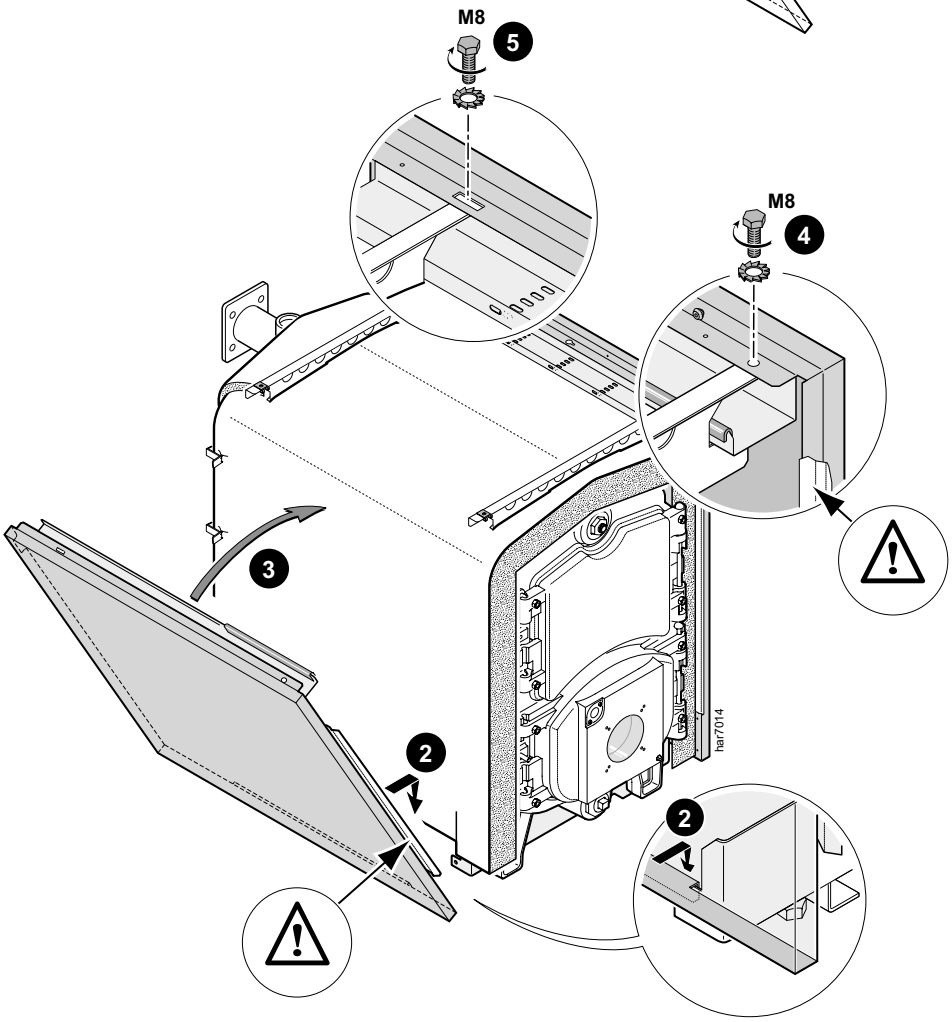

33 ASSEMBLING THE REAR PANEL

1. Place the panel in position and engage the plastic push clips.
2. Secure the panel at each corner with four self tapping screws and shakeproof washers.

Note.

If a pressure relief valve has already been fitted in the flow connector or if the panel is being replaced on a completed installation, the top centre piece of the panel may be removed.

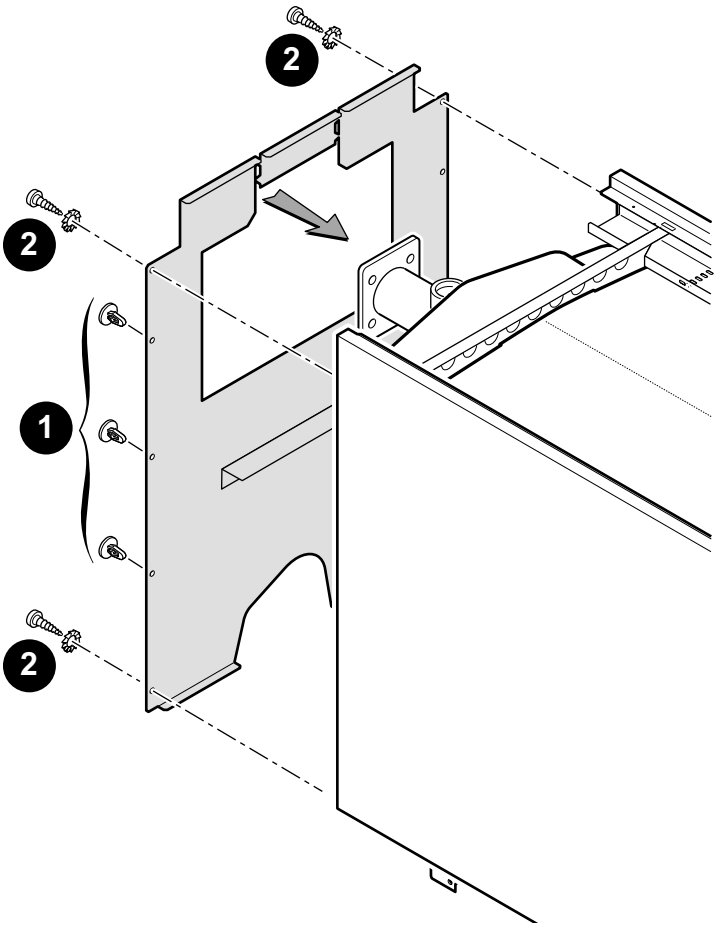

34 ASSEMBLING THE FRONT TOP PANEL

1. Engage the notches in the top panel onto the location buttons and slide forwards.

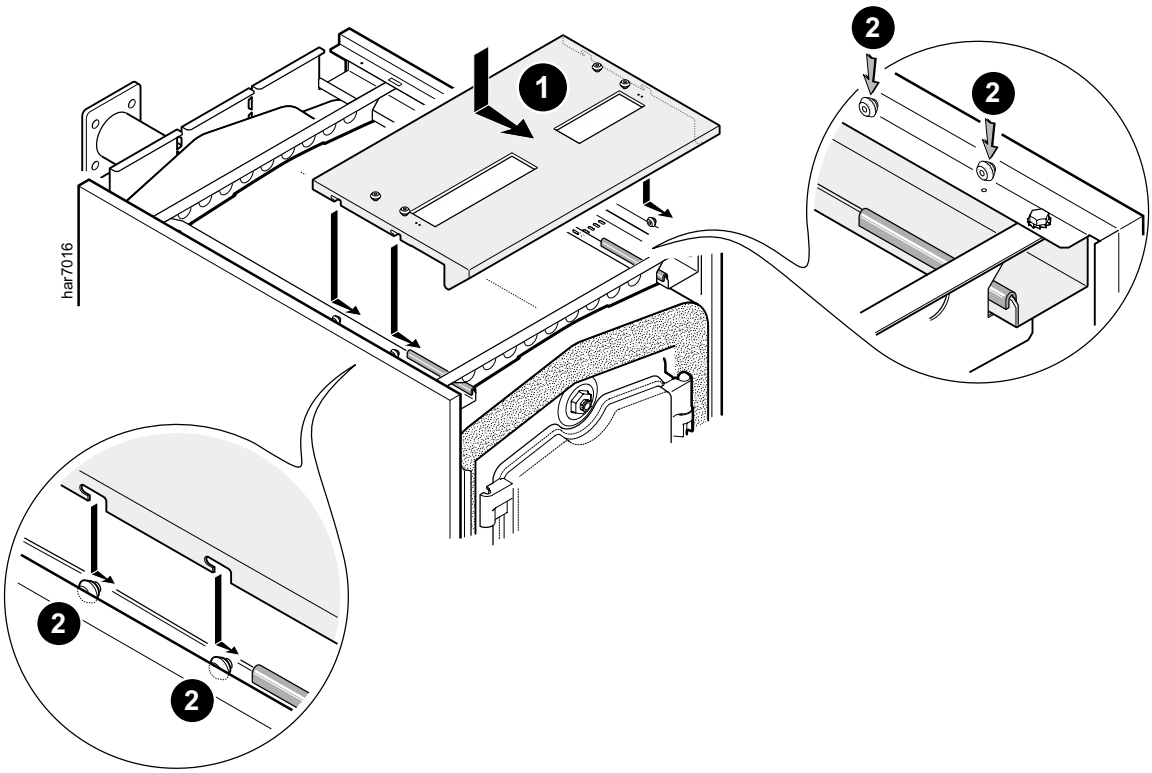

35 INSTALLING THE MAINS AND CONTROL WIRING

1. Route the mains supply in at the rear, along the tray of one of the side panels and up through the opening in the top front panel.
2. Route any remote sensor cables similarly in the other side panel.
3. Secure the cables with the cable ties provided.

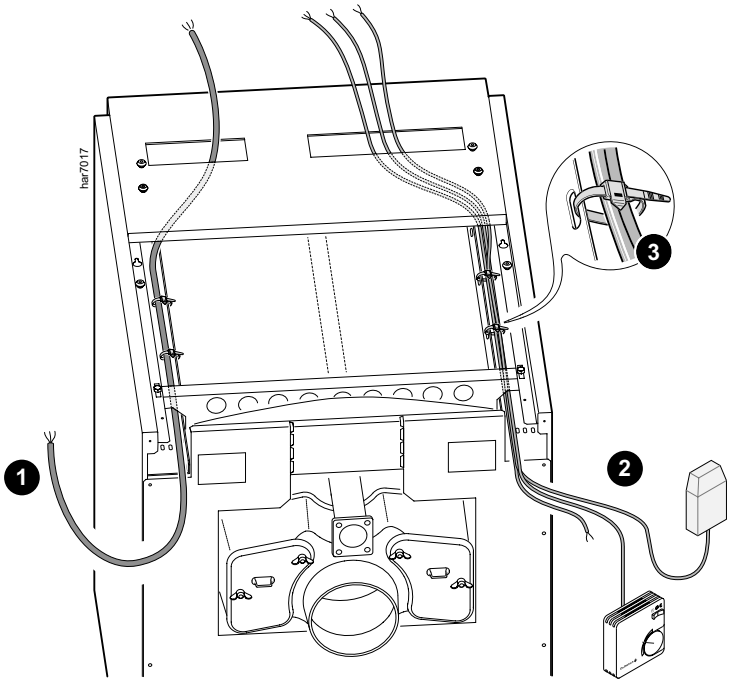

36 INSTALLING THE CONTROL PANEL - FD167 Standard

1. Route the sensors through the left or right hand opening in the top front panel.
2. Route the burner leads through the other opening in the top front panel.
3. Lower the control panel onto the location buttons nearer the front and slide the control panel forwards.

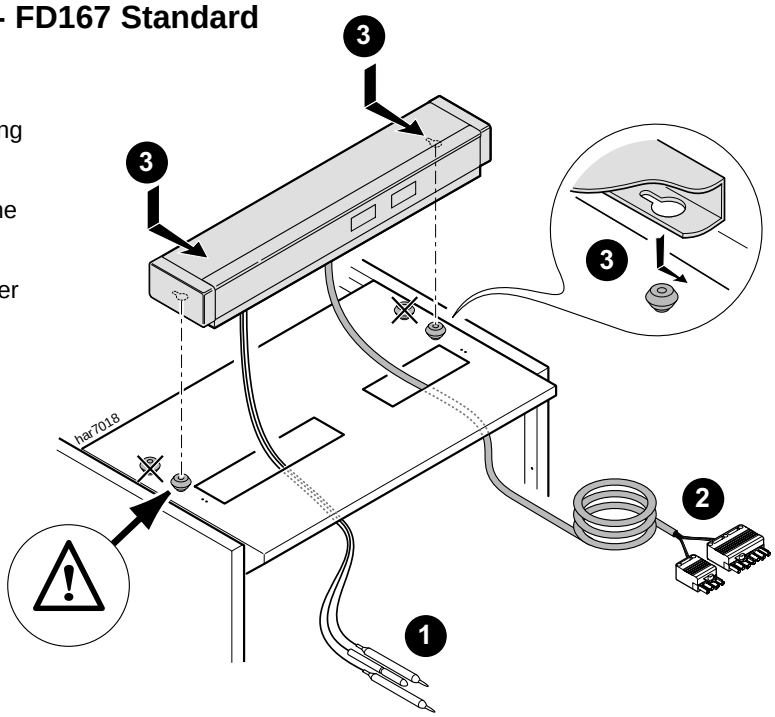

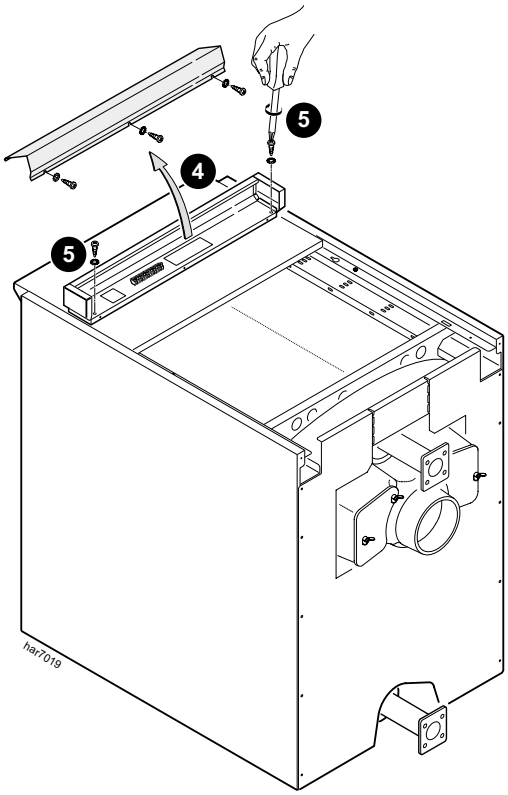

4. Remove the three screws from the rear of the control panel and remove the top/rear cover.
5. Secure the control panel to the casing top front panel with two self tapping screws and shakeproof washers provided.
6. Pull the mains cable and any other sensors into the control panel through the appropriate opening ready to make the connections.

37 INSTALLING THE CONTROL PANEL - FD168 Deluxe

1. Route the sensors through the left or right hand opening in the top front panel.
2. Route the burner leads through the other openings in the top front panel.
3. Lower the control panel onto the location buttons farthest away from the front and slide the control panel forwards.

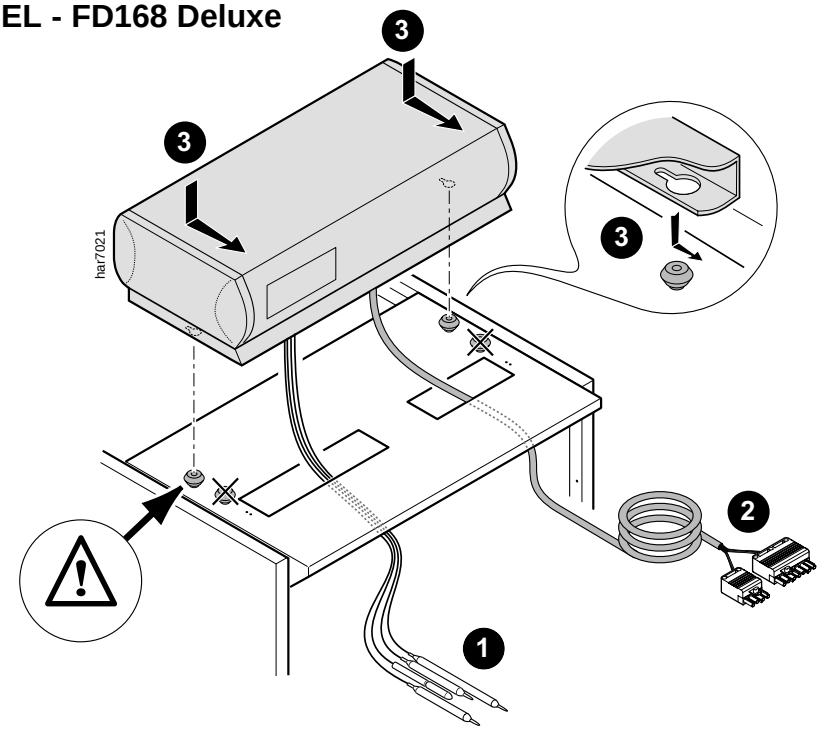

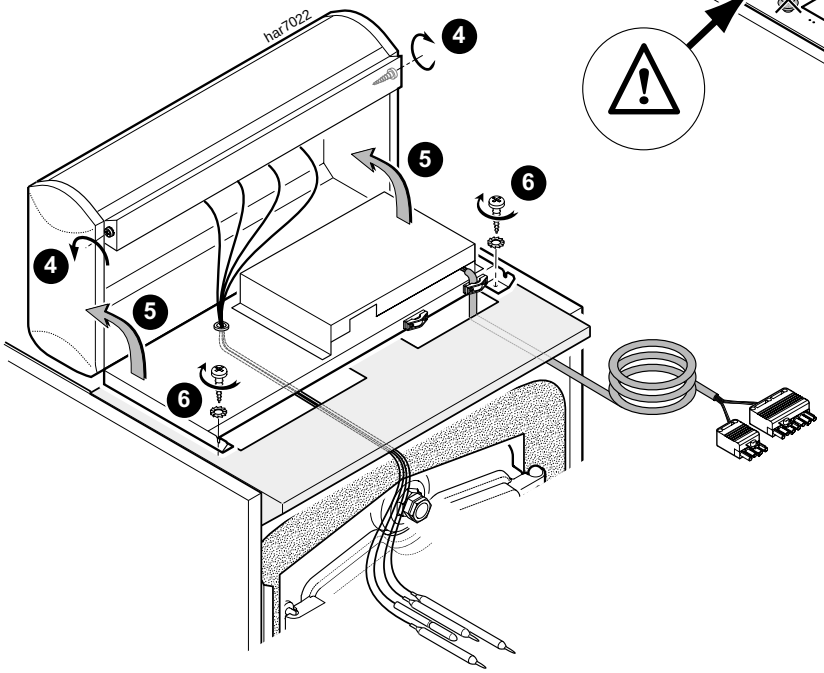

4. Remove the two screws from the sides of the control panel.
5. Tilt the control panel back.
6. Secure the control panel to the casing top front panel with two self tapping screws and shakeproof washers.
7. Pull the mains cable and any other sensors into the control panel through the appropriate opening ready to make the connections.

38 INSTALLING THE SENSORS AND ROUTING THE BURNER CABLE

1. Route the burner cable inside the front edge return of one side of the casing side panels opposite the burner hinges. (RH side shown for clarity)
2. Insert the sensors into the sensor pocket.
3. Loop the sensor leads back over the sensor pocket.
4. Secure the leads with the spring clip.

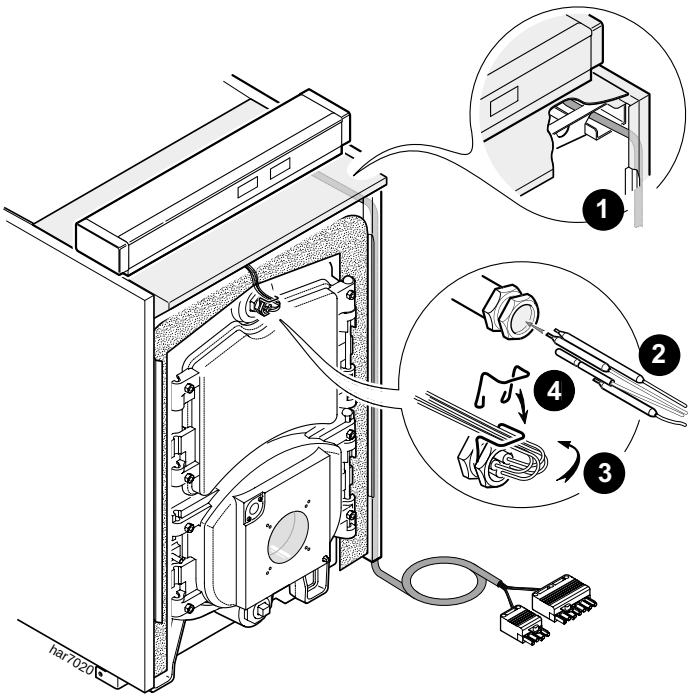

39 ASSEMBLING THE LOWER FRONT PANEL

1. Push the panel onto the location buttons and slide the panel downwards.

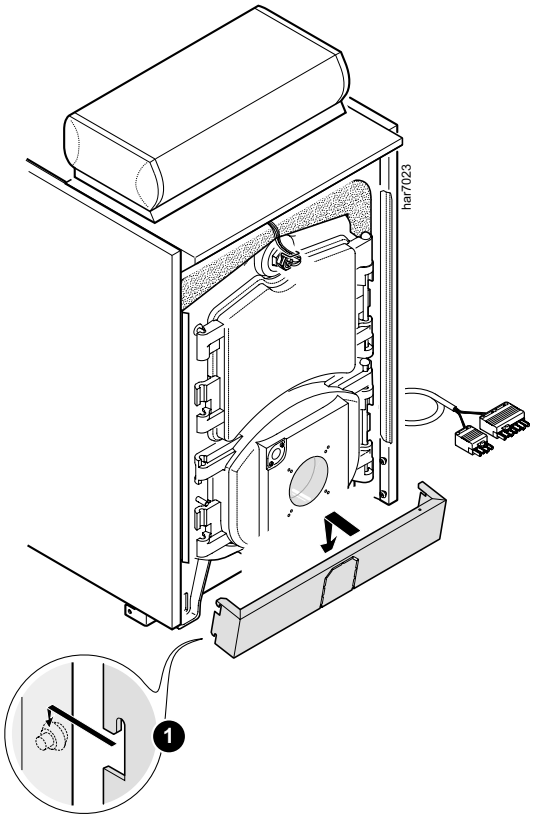

40 ASSEMBLING THE FRONT PANEL

1. Push the panel onto the location buttons and slide the panel downwards.

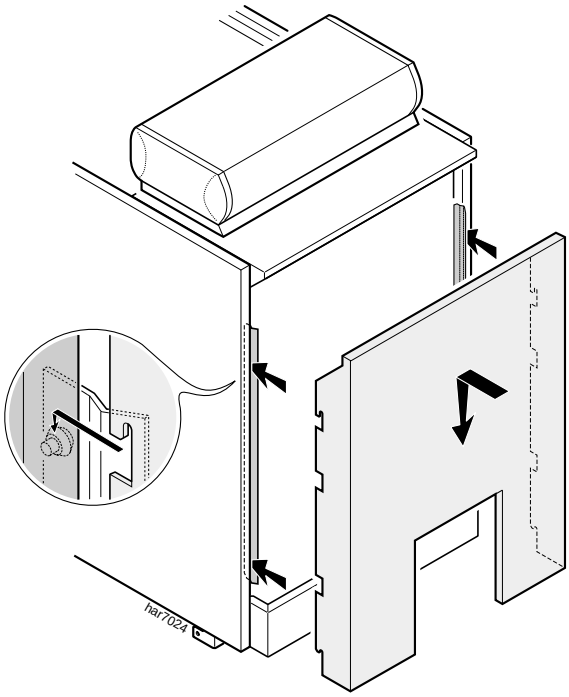

41 ASSEMBLING THE REAR TOP PANEL

1. Engage the location buttons on the top panel into the keyhole slots in the side panel and slide the panel forwards.
2. Secure the panel at the two top rear corners with two self tapping screws and shakeproof washers.

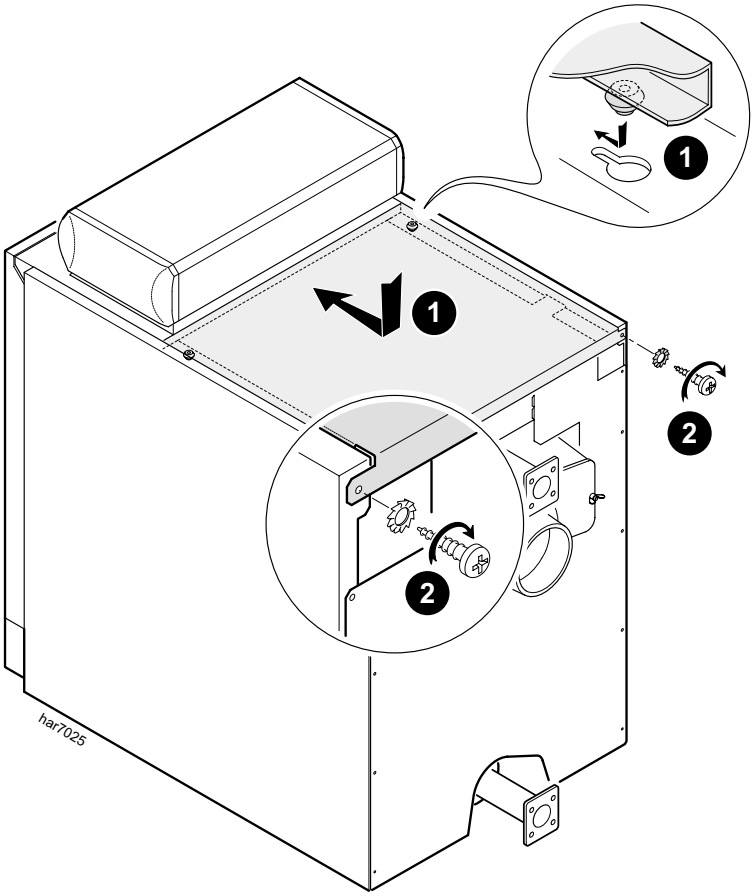

42 NAMEPLATE AND LEVELLING

1. Affix the identification plate and CE label (supplied in the instructions bag) on the casing (on the left or right-hand side) in an easily accessible location.
2. Check the boiler for level and adjust the feet if necessary.

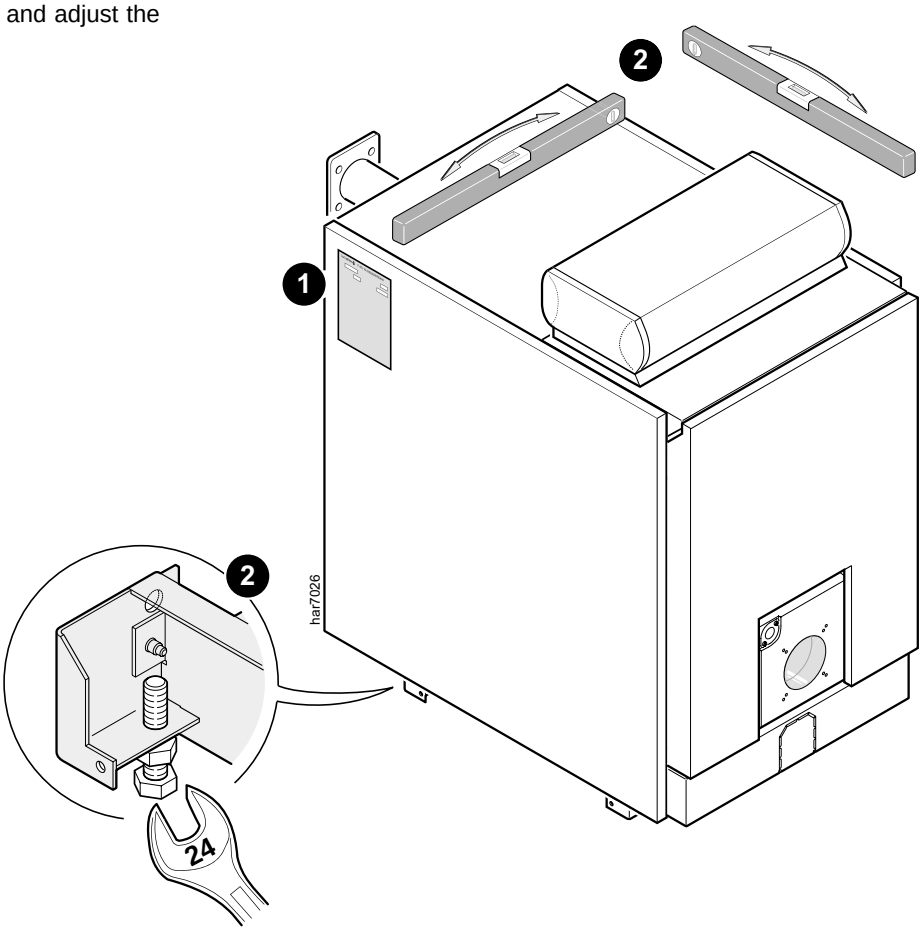

43 CONTROL PANEL (General)

Refer to Frames 55 or 57 for specific details of Standard or Deluxe panels.

Electrical control panel, equipped with temperature control.

The control panel carton contains:

1 control panel complete with burner connection harness.

The control panel incorporates a boiler thermostat controller, a thermometer and a safety thermostat.

The boiler thermostats - one controls the maximum boiler operating temperature. The other controls the high/low operation if a 2 stage burner is fitted.

The safety thermostat (with manual reset) - if the boiler temperature rises abnormally (110ºC), the safety thermostat cuts off the burner electricity power supply.

WARNING. In this case, you must call your installer

44 ELECTRICAL CONNECTIONS

WARNING. The electrical connections must be made by a qualified professional. The electrical wiring has been carefully checked in the factory and the internal connections of the control panel must not be modified in any event.

The electrical connections should be made following the information shown on the electrical diagrams delivered with the unit and the directions given in the instructions.

The electrical connection must comply with standards in force. The equipment must be powered by a circuit containing a remote double-pole switch with opening ≥ 3mm.

WARNING. The boiler must be earthed.

All connections must be made using the terminal blocks provided for this purpose at the back of the boiler control panel.

Connections cables are brought inside the boiler through cut-outs provided in the boiler back panel, which are large enough for use of commercially available conduit if required.

These cables are secured at the back of the control panel using cable clamps (cable clamps supplied in a separate pack) that are to be installed on the sheet metal.

45 BASIC CONNECTIONS - FD167 Standard Control Panel

1. To gain access to the connection strip, unscrew the three screws on the rear of the control panel and open the panel.
2. Pass the connecting cables to the control panel through the two cut-outs in the rear panel of the boiler and route them to the front via the cable channels. (See Frame 35).
3. Pass the cables into the control panel through the rectangular opening sin the front top panel.
4. Secure the cables to the base of the control panel with the cable clamps.
5. Connect the main supply to terminals 1, 2 and 3 of the connecting strip as shown. (See also Frame 46)

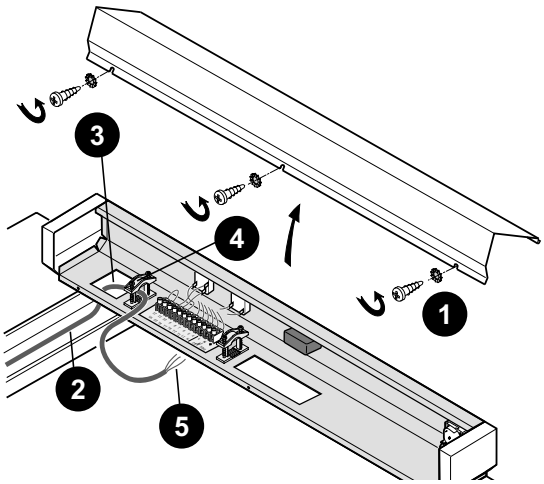

46 CONNECTING OPTIONAL FEATURES - FD167 Standard Control Panel

Flow Switch / Optional Safety Devices

If a flow switch or other safety control is to be included in the system, connect the device(s) in series in the safety circuit, (i.e. between terminal 5 of the connecting strip and burner terminal L1).

Burner Alarm Indicator

If an alarm indicator is to be included it should be connected across terminal 12 (live) and terminal 4 (neutral).

Safety Thermostat Alarm Indicator System

1. The unused insulated terminal on the safety thermostat may be used to connect an alarm signal. (This terminal becomes live if the safety thermostat trips.)
2. Remove the insulation and connect the live wire from the alarm indicator to the unused terminal using a suitable spade connector and the neutral to terminal 4.

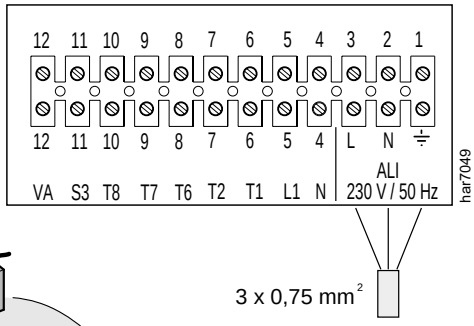

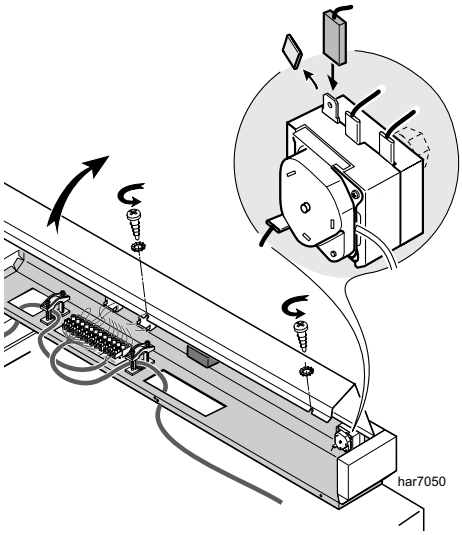

47 WIRING DIAGRAM - FD167 Standard Control Panel

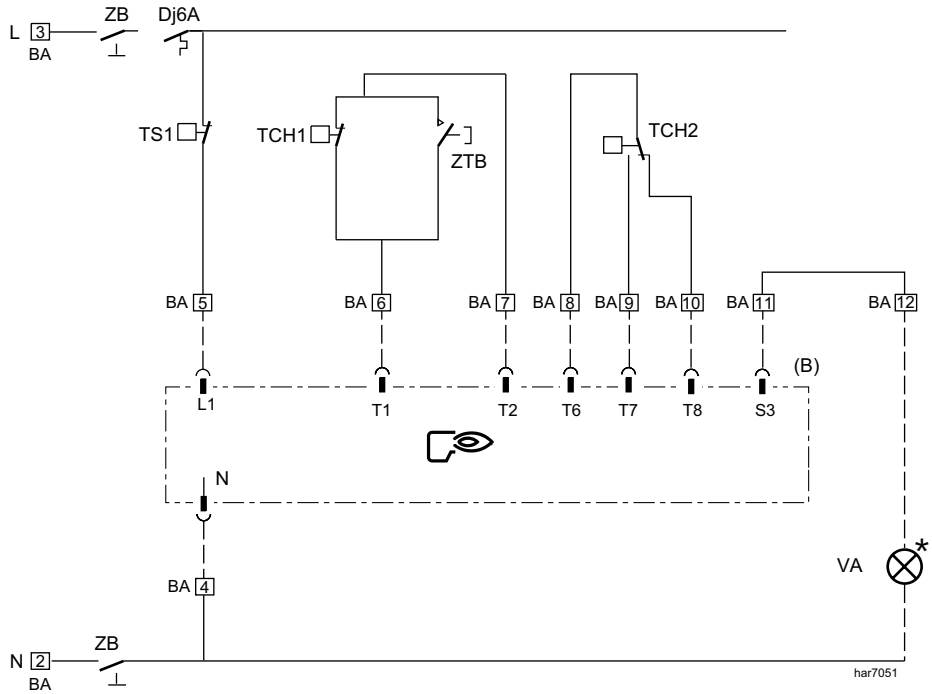

B	Burner
BA	Connection strip
Dj 6 A	6 A circuit-breaker
L	Live
N	Neutral
TCH1	Stage 1 boiler thermostat
TCH2	Stage 2 boiler thermostat
TS1	Safety thermostat
VA	Alarm indicator
ZB	Burner switch
ZTB	STB-Test switch
	Connecting strip
*	Optional
	Connector

48 BASIC CONNECTIONS - FD168 Deluxe Control Panel

1. To gain access to the connection strip, loosen the two screws located on either side of the front of the panel.
2. Tilt the panel back.
3. Unscrew the two terminal strip cover screws and remove the cover.
4. Pass the connecting cables to the control panel through the two cut-outs in the rear panel of the boiler and route them to the front via the cable channel/s. (See Frame 35).
5. Pass the cables into the control panel through the rectangular openings in the front top panel.
6. Secure the cables to the base of the control panel with the cable clamps.
7. Connect the mains to terminals 1, 2 and 3 of the connecting strip as shown. (See also Frame 49)

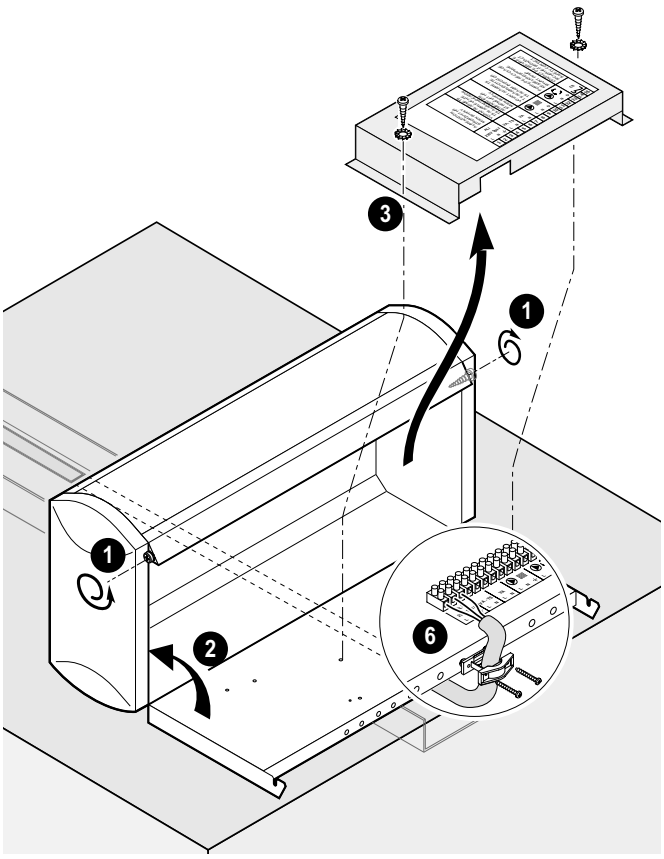

49 CONNECTING OPTIONAL FEATURES - FD168 Deluxe Control Panel

Circulating Pump

The CH circulating pump should be connected across terminals 8, 9 and 10.

Shunt Pump

The shunt pump should be connected across terminals 11, 12 and 13.

Flow Switch / Optional Safety Device

If a flowswitch or other safety control is to be included in the system, connect the device(s) in series in the safety circuit, across terminals 14 and 15.

Burner Alarm Indicator

If an alarm indicator is to be included it should be connected across terminals 6 and 7.

Safety Thermostat Alarm Indicator

If an alarm indicator is to be included it should be connected across terminals 4 and 5.

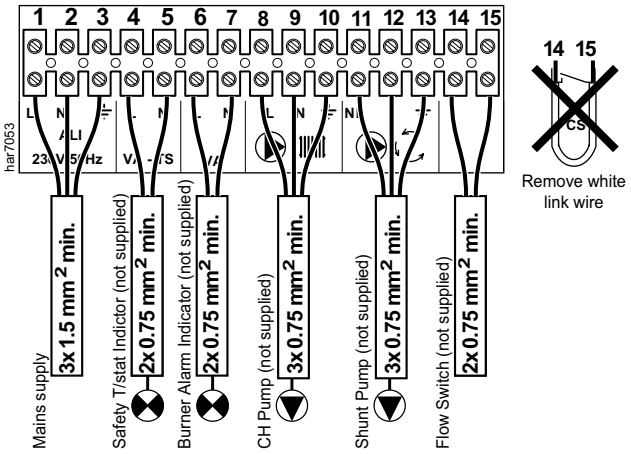

50 FITTING OPTIONAL FEATURES - FD168 Deluxe Control Panel

Hour Run Meters (IC8)

One or two optional hour run meters (stage 1 and 2) may be fitted on the front of the control panel.

Proceed as follows:

1. Cut the cover off with a cutter along the edges of the coloured rectangle.
2. Pull out the two wires standing by in the control panel.
3. Connect the wires to the hour run meter (the wires are interchangeable).
4. clip the hour run meter into the control panel.

If the burner is a one-stage burner, the counter displays the burner operating time.

If the burner has two stages, the hour run meters display the operating time of each stage.

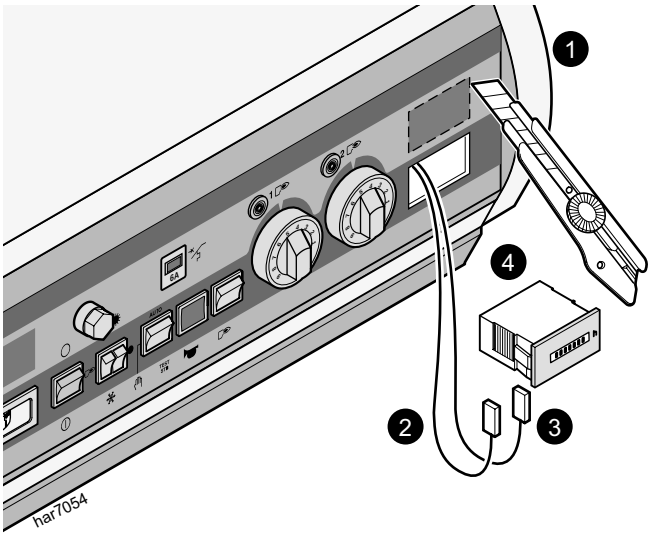

Flue Gas Thermometer (ID28)

An optional flue gas thermometer may be fitted on the front of the control panel.

Proceed as follows:

1. Cut the cover off with a cutter along the edges of the coloured rectangle.
2. Clip the thermometer into the opening.
3. Route the sensor to the back of the boiler via the cable channel and insert it in the flue gas pipe.

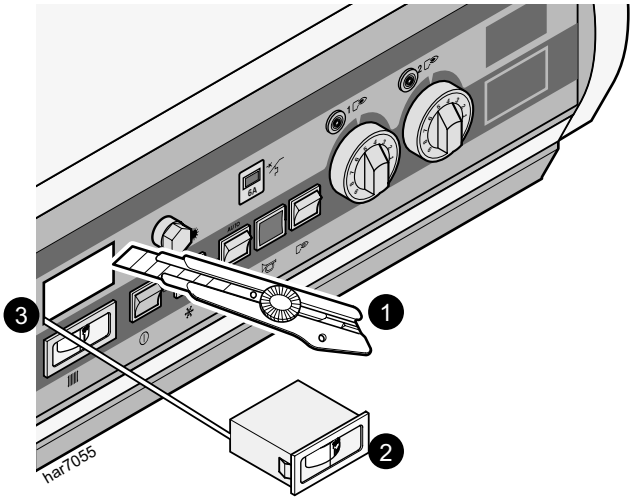

51 WIRING DIAGRAM - FD168 Deluxe Control Panel

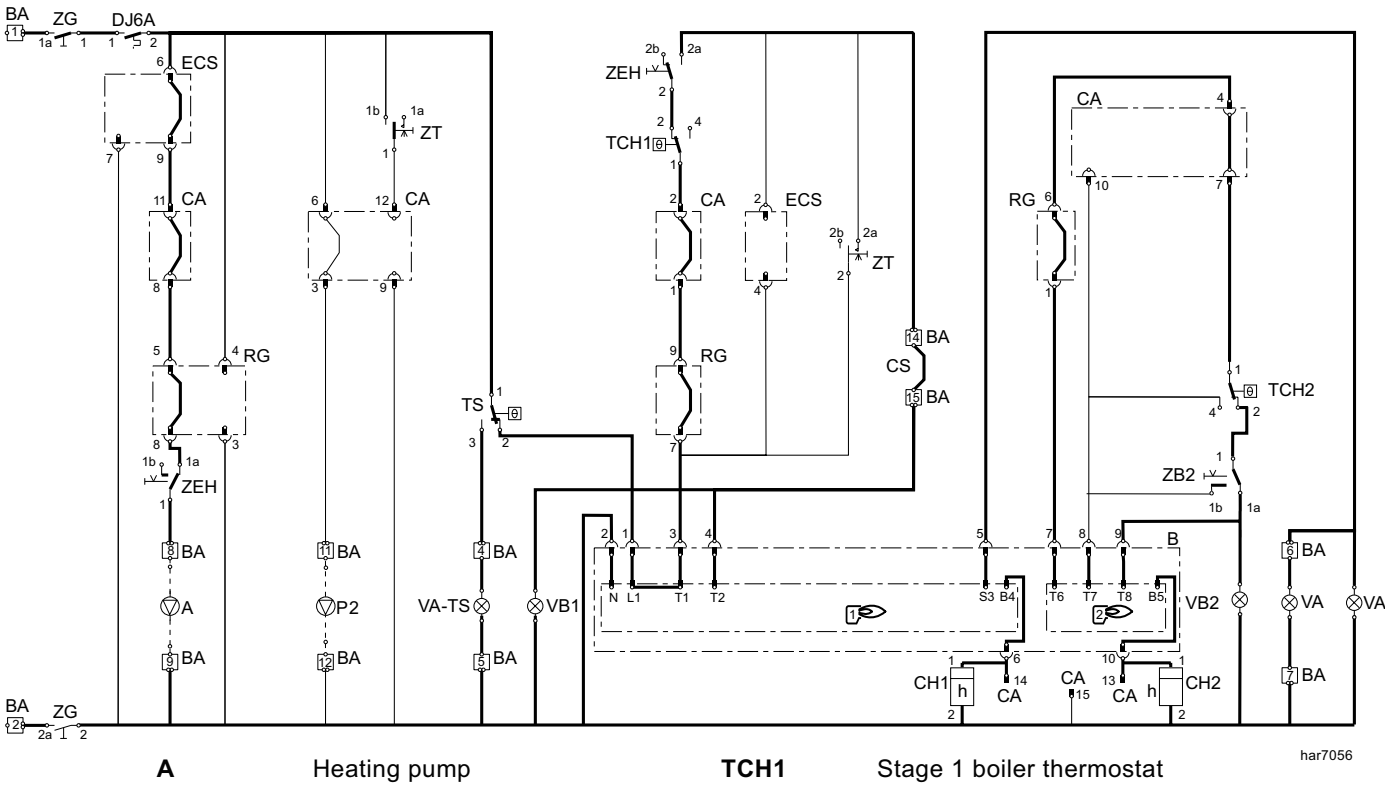

A	Heating pump	**TCH1**	Stage 1 boiler thermostat
B	Burner	**TCH2**	Stage 2 boiler thermostat
BA	Connecting strip	**TS**	Safety thermostat
CA	Cascade connection block	**VA**	Alarm indicator
CH1	Stage 1 hours run meter (optional)	**VA-TS**	Safety thermostat alarm indicator
CH2	Stage 2 hours run meter (optional)	**VB1**	Stage 1 operating indicator
CS	Safety contact	**VB2**	Stage 2 operating indicator
Dj6A	6 A circuit-breaker	**ZB2**	Stage 2 burner switch
ECS	Domestic hot water control	**ZEH**	Summer/Winter switch
P2	Shunt pump	**ZG**	Main switch
RG	Connectoin block	**ZT**	Test switch

WARNING. The Manual/Auto/Test switch may be put in either the Manual or Auto position for normal operation

52 BURNER WIRING HARNESS - FD167 Standard Control Panel

Burner Cable

The control panel is supplied with a burner power supply cable, with one 7 and one 4-pin European plugs on one end and a terminal block with male connecting terminals on the other end.

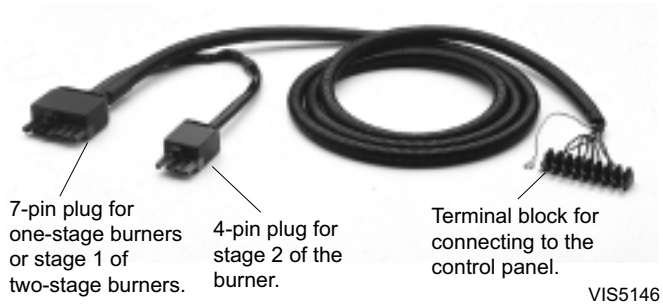

Control Panel Connections

Connect the terminal block with the male connecting terminals to terminals 4-12 in the control panel.

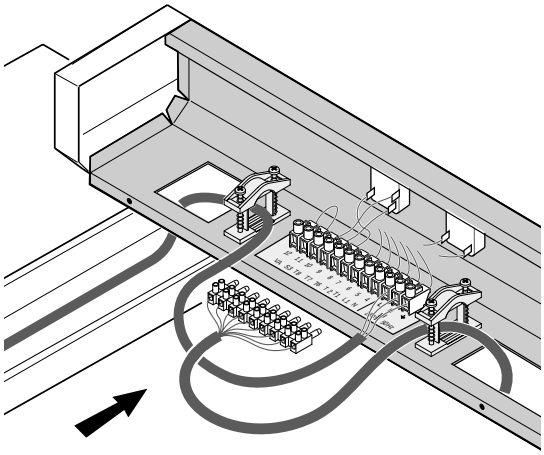

Burner Connections without Plug-in Connectors

In this case, the connectors supplied with the burner cable must be rewired.

The diagram shows the wire numbers and terminals of the burner connectors.

The table below specifies the way in which the cables are to be connected to the burner control box.

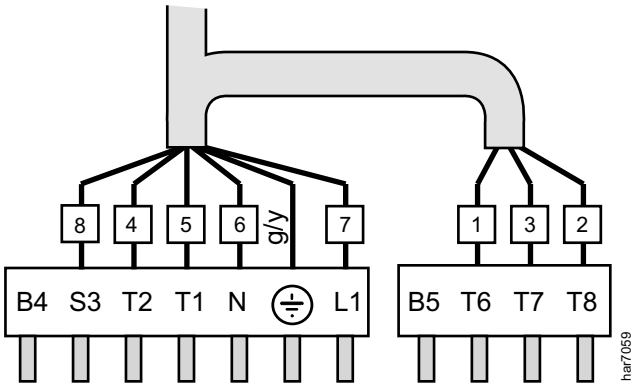

Burner Connector Terminal No.	Wire No.	From	Connection to the Burner Control Box
L1	7	Permanent Live supply from the safety thermostat	Burner main supply
⏚	g/y	Earth connection	Earth connection
N	6	Neutral taken after On/Off Switch	Neutral terminal
T1/T2	5/4	Volt free contact of the stage 1 boiler thermostat	Insert the control circuit of boiler stage 1
S3	8	Burner alarm indicator	Alarm output (live)
T6	1	Stage 2 boiler thermostat input	Insert in the control circuit of burner stage 2
T7	3	Stage 2 "boiler off" thermostat output	Connect only if the burner is of the modulating type
T8	2	Stage 2 "boiler on" thermostat output	Insert in the control circuit of burner state 2

Note.

If the electrical characteristics of the burner exceed the following values:

- *start up current > 16 A or*
- *P > 450 W (or 1/2 cont. hp. motor), or*
- *I > 2A cos φ = 0,7*

The burner controls circuit must use a relay.

53 BURNER WIRING HARNESS - FD168 Deluxe Control Panel

Burner Cable

The control panel is supplied with a burner power supply cable with one 7 and one 4-pin European plugs which connect to the burner connectors. The other end of the cable connects to the control panel.

7-pin plug for one-stage burners or stage 1 of two-stage burners.

4-pin plug for stage 2 of the burner.

Burner Connections without Plug-in Connectors

In this case, the connectors supplied with the burner cable must be rewired.

The diagram shows the wire numbers and terminals of the burner connectors.

The table below specifies the way in which the cables are to be connected on the burner control box.

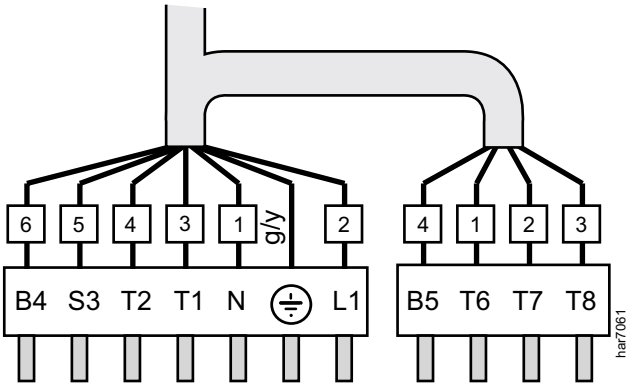

Burner Connector Terminal No.	Wire No.	From	Connection to the Burner Control Box
L1	7	Permanent Live supply from the safety thermostat	Burner main supply
⏚	g/y	Earth connection	Earth connection
N	6	Neutral taken after On/Off Switch	Neutral terminal
T1/T2	5/4	Volt free contact of the stage 1 boiler thermostat	Insert the control circuit of boiler stage 1
S3	8	Burner alarm indicator	Alarm output (live)
T6	1	Stage 2 boiler thermostat input	Insert in the control circuit of burner stage 2
T7	3	Stage 2 "boiler off" thermostat output	Connect only if the burner is of the modulating type
T8	2	Stage 2 "boiler on" thermostat output	Insert in the control circuit of burner state 2

Note.

If the electrical characteristics of the burner exceed the following values:

- *start up current > 16 A or*
- *P > 450 W (or 1/2 cont. hp. motor), or*
- *I > 2A cos φ = 0,7*

*The burner controls must be relayed, e.g. with the relaying kit (package **BP 51**, optional).*

54 FUEL OIL OR GAS CONNECTIONS

Refer to the instructions supplied with the burner.

55 COMMISSIONING - FD167 Standard Control Panel

IMPORTANT. Domestic hot water circuits (if they exist and heating circuits must have been filled and bled, and leak tightness tests must have been carried out on them, in accordance with the instructions for the domestic hot water calorifier (if existing) and boiler.

Refer to the following instructions and Frame 59 to start up the boiler.

- the instructions delivered with the burner.
- the instructions delivered with the domestic hot water calorifier, (if existing).

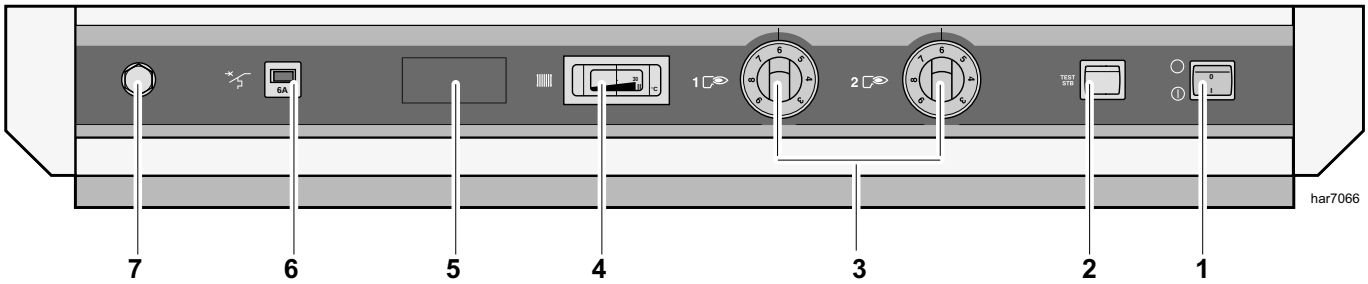

1. **Boiler ON/OFF switch.**
   Position ⏻.....ON Position ○.....OFF
2. **TEST STB:**
   When held in the pressed (momentary use) position it tests the safety thermostat.
3. **Boiler Thermostats:**
   Adjustment range 30-90ºC
   For ON/OFF burners use 1st stage thermostat only.
   For two stage burners set 2nd stage 5ºC below 1st stage setting.
   Built in stops may be reset (See Frame 56).
   Factory set at 75ºC.
4. **Boiler Thermometer:**
   Indicates boiler flow water temperature.
5. **Flue Gas Thermometer:**
   Optional. Location if fitted.
6. **Circuit Breaker:**
   6 amp. Manual reset.
7. **Safety Thermostat:**
   Set at 110ºC. Manual reset.

56 BOILER THERMOSTAT (Maximum Setting Adjustment)

The boiler thermostats maximum setting are factory set at 75ºC. The fixed stop controlling the maximum setting is adjustable as follows:

1. Carefully remove the control knob.
2. Pull out the pin from the back of the knob.
3. Relocate in the desired position.
4. Carefully replace the knob ensuring that the new pin position is at the correct side of the stop.
5. Rotate the knob to the new desired maximum position to check correct setting. (The setting numbers 3-9 are approximately scaled to represent 30-90ºC).

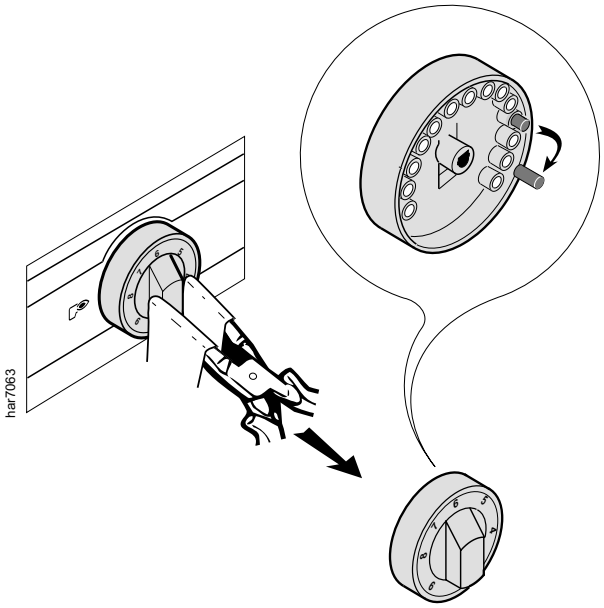

57 COMMISSIONING - FD168 Deluxe Control Panel

IMPORTANT. Domestic hot water circuits (if they exist and heating circuits must have been filled and bled, and leak tightness tests must have been carried out on them, in accordance with the instructions for the domestic hot water calorifier (if existing) and boiler.

Refer to the following instructions and Frame 59 to start up the boiler.

- the instructions delivered with the burner.
- the instructions delivered with the domestic hot water calorifier, (if existing).

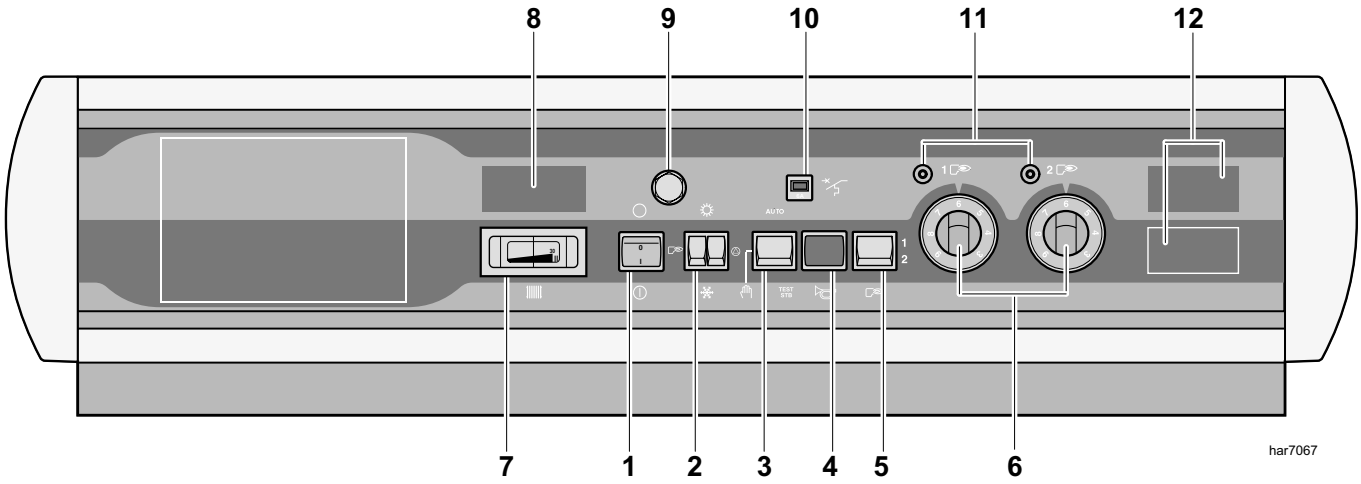

1. Boiler ON/OFF switch:

Position ⓘ.....ON Position ○.....OFF

2a. Burner Summer/Winter switch:

Winter ❄ starts the burner.
Summer ☼ stops the burner.

2b. Heating Pump Summer/Winter switch:

Winter ❄ starts the heating pump.
Summer ☼ stops the heating pump.

3. Three-Position Switch:

TEST STB:

When held in the pressed (momentary use) position it tests the safety thermostat.

Note. If two stage burner control fitted operation will continue on 1st stage after 2nd stage cut-off.

AUTO : automatic position:

Used for normal operation of the boiler.

✋: Manual Position:

May also be used for normal operation.

4. Burner Alarm Indicator:

Indicates burner lockout.

5. Stage Switch:

Used to select number of burner stages requested.

6. Boiler Thermostats:

Adjustment range 30-90ºC.

For ON/OFF burners use 1st stage thermostat only.

For two stage burners set 2nd stage 5ºC below 1st stage setting.

Built in stops maybe reset (See Frame 56).

Factory set at 75ºC

7. Boiler Thermometer:

Indicates boiler flow water temperature.

8. Flue Gas Thermometer:

Optional. Location if fitted.

9. Safety Thermostat:

Set at 110ºC. Manual reset.

10. Circuit Breakers:

6 amp. Manual reset.

11. Stage 1 and 2 Indicators:

Illuminate when relevant thermostat calling for heat.

58 COMMISSIONING AND TESTING

A. ELECTRICAL INSTALLATION

1. Checks to ensure electrical safety should be carried out by a competent person.
2. ALWAYS carry out the preliminary electrical system checks, i.e. earth continuity, polarity, resistance to earth and short circuit, using a suitable meter.

B. FOR GAS INSTALLATION

1. The whole of the gas installation, including the meter, should be inspected and tested for soundness and then purged in accordance with the recommendations of the relevant standards listed on page 4.

WARNING. *Whilst effecting the required gas soundness test and purging air from the gas installation, open all windows and doors, extinguish naked lights and DO NOT SMOKE.*

59 INITIAL LIGHTING

1. Check that the system has been filled and the boiler is not air locked - air in the boiler could damage the heat exchanger.
2. Check that all the drain cocks are closed and any valves in the flow and return are open.
3. Check that the GAS SERVICE COCK IS ON.
4. Unscrew the safety thermostat (overheat) reset button cap (7) or (Deluxe model 9) and press the reset button.
5. Set the boiler thermostats (3) or (Deluxe model 6) to maximum.
6. If Deluxe control panel fitted set the 3 position switch (3) to Manual or Auto.
7. If Deluxe control panel fitted set the burner and pump summer/winter switches (2) to the winter setting (❄).
8. Switch the electricity supply ON and check that all the external controls are calling for heat. Set the main boiler switch (1) to ON (⏻).
9. The burner will commence the ignition sequence. If the burner has failed to light then it will lock out. Press the reset button to restart the ignition sequence.
10. Operate the boiler for 20 minutes and for gas fired boilers check the gas rate (Table 1).
11. Refer to the burner instructions for specific operating features.
12. Set the boiler thermostats (3) or (Deluxe model 6)to appropriate settings ensuring the second stage is 5ºC lower than the first stage if a 2 stage burner is fitted.

60 GENERAL CHECKS

Make the following checks for correct operation.

1. The correct operations of ANY secondary system controls should be proved. Operate each control separately and check that the main burner or circulating pump, as the case may be responds.
2. Water circulation system;
   a. With the system HOT examine all water connections for soundness.
   b. With the system still HOT, turn off the gas or oil burner, water and electricity supplies to the boiler and drain down to complete the flushing process.
   c. Refill and vent the system, clear all air locks and again check for water soundness.
   d. Balance the system.
3. Finally set the controls to the User's requirements.

Note.

*We advise never to set the boiler thermostat below position **4** (approx. 40ºC) in order to avoid the risk of combustion products condensing on the walls of the boiler.*

61 HANDING OVER

ROUTINE OPERATION

Describe the function of the boiler and system controls and show how they are adjusted and used.

Hand these Installation and Servicing Instructions, User's Instructions and Log book to the customer and request him to keep them in a safe place for ready reference.

IMPORTANT. Point out the owner that the boiler must have regular maintenance and cleaning, at least annually, in order to ensure reliable and efficient operation. Regular attention will also prolong the life of the boiler and should preferably be performed at the end of the heating season.

Recommend that a contract for this work should be made with the regional gas authority or a CORGI registered heating installer for gas fired boilers.

62 MAINTENANCE

WARNING

The operations described below shall always be performed with the boiler and the power supply switch off.

The boiler front panel has to be removed to access the various devices to be maintained and checked.

1. Slide the front panel up and pull forwards.

2. Lift off the engaging location buttons

Cleaning the Casing Material

Use a soapy solution and sponge only. Rinse with clean water and dry with chamois leather or soft cloth.

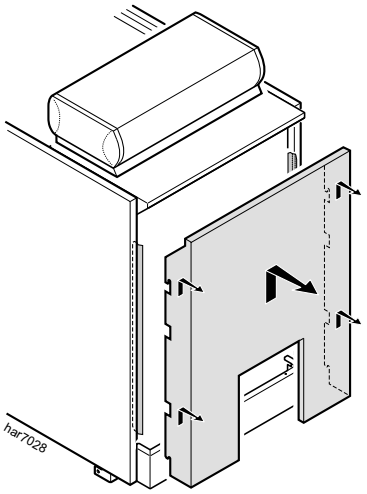

63 CLEANING THE FLUEWAY

1. Close off the fuel supply to the burner.

2. Ensure that the boiler has been cooled to ambient temperature.

3. Isolate the mains supply to the boiler and burner.

4. Disconnect the cable and supply pipe to the burner.

5. Open the combustion chamber and flue way doors by removing the 8 nuts.

6. Remove the flue way baffles.

7. Thoroughly clean the flue ways and baffles.

8. Remove the rear cleanout covers by undoing the 4 wingnuts and dispose of the debris/soot that may have accumulated.

9. Replace the rear cleanout covers after first inspecting and if necessary replacing the seal.

10. Brush out the combustion chamber and vacuum the soot from beneath the flue ways.

11. Replace the flue baffles into the flue ways (refer to Frames 24 and 25 for number and location).

12. Check the condition of the combustion chamber door insulation.

13. Check the condition of the combustion chamber door seal.

14. Refer to the burner manufacturer's Instructions for burner maintenance.

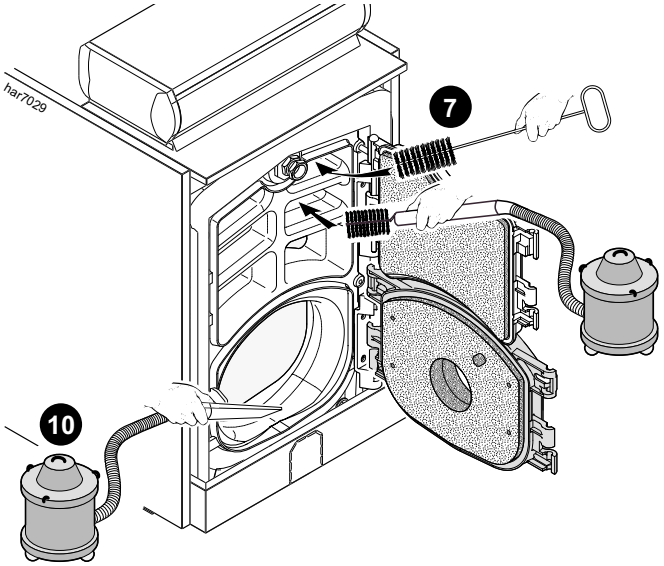

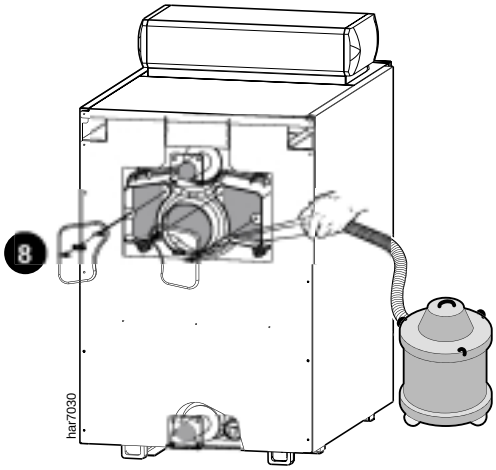

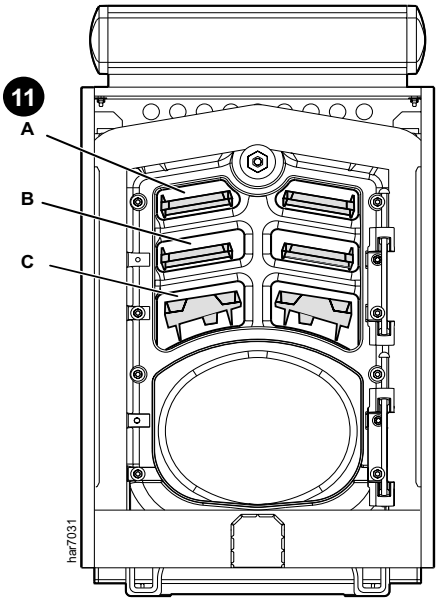

64 SYSTEM MAINTENANCE

Water Level

Check the water level in the installation regularly, and if necessary top it up without allowing a sudden inlet of cold water into the hot boiler.

The operation should only be necessary a few times per season; if it has to be done more frequently, there is probably a leak which should be found and corrected without delay.

Safety Devices

Check that safety devices, and particularly the heating circuit safety valve, are working correctly at regular intervals, and at least when the boiler is cleaned.

Draining

It is recommended that an installation should not be emptied unless absolutely necessary.

For example: when leaving for several months and/or there is a risk of frost in the building.

65 SAFETY

For boilers with gas burners

It is the law that any service work must be carried out by a registered CORGI installer.

WARNING. Always turn off the gas supply at the gas service cock, and switch off and disconnect the electricity supply to the appliance and any external controls before servicing.

IMPORTANT. After completing the servicing or replacement of components always:

- Test for gas soundness.
- check the water system is correctly filled and free of air. Air in the boiler could cause damage to the heat exchanger.
- With the system hot examine all water connections for soundness.
- Check the gas rate and measure the combustion CO/CO_2 content.
- Complete the boiler log book.
- Carry out functional checks as appropriate.

66 SERVICING SCHEDULE

To ensure the continued safe and efficient operation of the appliance it is recommended that it is checked at regular intervals and serviced as necessary. The frequency of servicing will depend upon the installation condition and usage but should be carried out at least annually.

Caradon Ideal Limited does not accept any liability resulting from the use of unauthorised parts or the repair and servicing of appliances not carried out in accordance with the Company's recommendations and specifications.

1. Light the boiler and carry out function checks, noting any operational faults.
2. Run the boiler for 10 minutes and then check the burner rate.
3. Optional test for gas fired boilers - Connect a suitable gas analyser to the sampling point fitted in the flue adapter. For correct boiler operation the CO/CO2 ratio of the flue gas should not be greater than 0.004 ratio. If this is the case and the gas input is at least 90% of the nominal, no further action need be taken. If not proceed to 4.
4. Remove and clean the burner.
5. Inspect the heat exchanger through the burner opening. Clean the flueways.
6. Check that the flue terminal is unobstructed and that the flue system is sealed correctly.
7. After completion of servicing refer to previous frame for reference to final safety checks.

NOTES

NOTES

NOTES

Technical Training

The Ideal Boilers Technical Training Centre offers a series of first class training courses for domestic, commercial and industrial heating installers, engineers and system specifiers. For details of courses please ring: 01482 498 432

Ideal Boilers, P.O. Box 103, National Ave, Kingston upon Hull, HU5 4JN. Telephone: 01482 492 251 Fax: 01482 448 858. Registration No. London 322 137.

Caradon Ideal Limited pursues a policy of continuing improvement in the design and performance of its products. The right is therefore reserved to vary specification without notice.

BOILERS Ideal

ENGINEERED FOR PEACE OF MIND

June 2003 UIN 200 088 A01

Caradon

Ideal Limited

Ideal Commercial/Technical Helpline: 01482 498 376

www.idealboilers.com